MD



Volumetric pumps with liquid ring impeller that gives considerable suction power. Particularly suitable for liquid transfer (including volatile liquids). The pumps have a frontal brass cover thus avoiding the risk of blockage.

Construction features

Pump body	cast iron and brass
Motor bracket	cast iron
Impeller	brass
Mechanical seal	ceramic-graphite-NBR
Motor shaft	stainless steel AISI 416
Liquid temperature	0 - 90 °C
Operating pressure	max 8 bar

Motor

2 poles induction motor	3~ 230/400V - 50Hz 1~ 230V - 50Hz (with thermal protection)
Insulation class	F
Protection degree	IPX4

MDT 75 -G

- mech. seal: standard; **G** for diesel
- motor: 1~; **T** 3~
- pump type

LOTS				
TYPE	TRUCK		CONTAINER	
	PALLET (cm)	N° pumps	PALLET (cm)	N° pumps
MD(T) 75-100	85×110×170	105	85×110×190	135
			80×120×170	136

MD

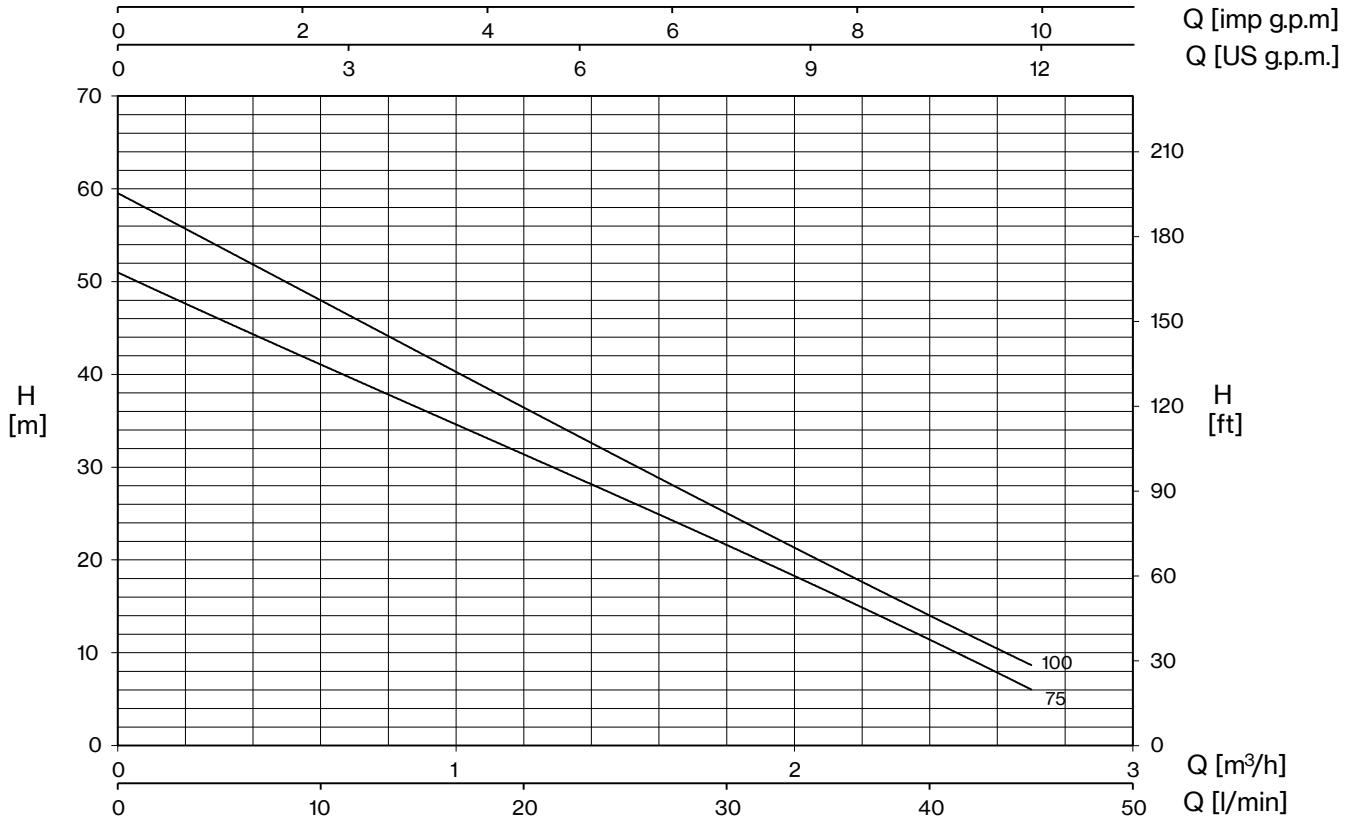

TYPE - 50 Hz		P2		P1		CURRENT		Q (m³/h - l/min)					
1~	3~			1~	3~	1~ 230V	3~ 400V	0,3	0,6	1,2	1,8	2,4	2,7
								5	10	20	30	40	45
		HP	kW	kW		A		H (m)					
MD 75	**MDT 75**	0,8	0,59	1,03	0,94	5,0	1,7	46,0	41,0	31,5	21,5	11,5	6,0
MD 100	**MDT 100**	1	0,74	1,17	0,98	5,4	2,1	53,0	48,0	37,0	25,0	13,5	9,0

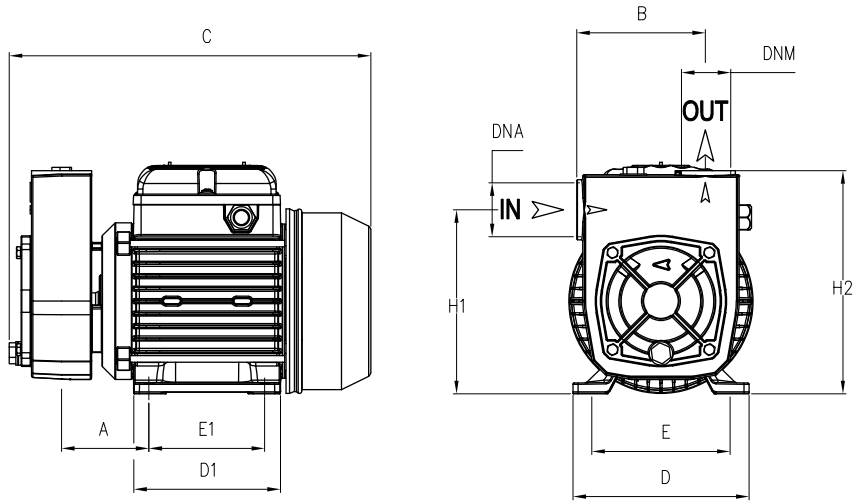

TYPE		DIMENSIONS (mm)														Kg
~1	~3	A	B	C	D	D1	E	E1	H1	H2	DNA	DNM	I	L	M	
MD 75	**MDT 75**	70	98,5	270	135	112	112	89	141	170	1" G	1" G	310	185	195	11,1
MD 100	**MDT 100**	70	98,5	270	135	112	112	89	141	170			310	185	195	11,8