EBARA

Japanese Technology since 1912

3 SERIES F version

Data Book 50Hz

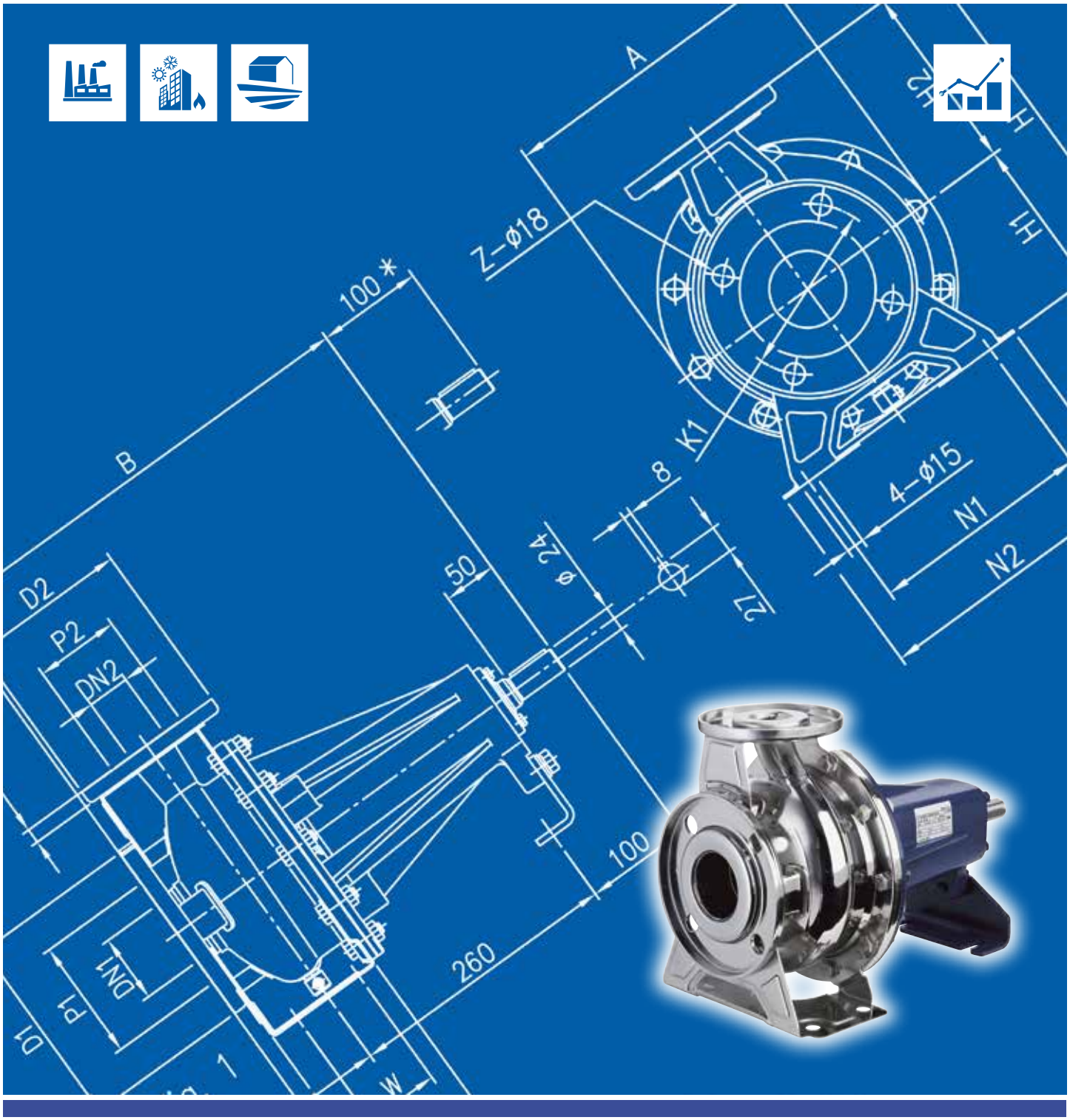

CONTENTS

50Hz

Rev. J

	Page
- SPECIFICATIONS	
PUMP SPECIFICATIONS	200-201
TYPE KEY	202
SELECTION CHART	203
PERFORMANCE RANGE	204
MEI INDEX SPECIFICATION	205
PERFORMANCE CURVE 32-125	206
PERFORMANCE CURVE 32-160	207
PERFORMANCE CURVE 32-200	208
PERFORMANCE CURVE 40-125	209
PERFORMANCE CURVE 40-160	210
PERFORMANCE CURVE 40-200	211
PERFORMANCE CURVE 50-125	212
PERFORMANCE CURVE 50-160	213
PERFORMANCE CURVE 50-200	214
PERFORMANCE CURVE 65-125	215
PERFORMANCE CURVE 65-160	216
PERFORMANCE CURVE 65-200	217
PERFORMANCE CURVE 65-250	218
PERFORMANCE CURVE 80-160	219
PERFORMANCE CURVE 80-200	220
PERFORMANCE CURVE 80-250	221
- CONSTRUCTIONS	
SECTIONAL VIEW 3SF-3LSF (32,40,50,65-125/160/200)	300
CONSTRUCTIONS 3SF-3LSF (32,40,50,65-125/160/200)	301
SECTIONAL VIEW 3LSF 80-160	302
CONSTRUCTIONS 3LSF 80-160	303
SECTIONAL VIEW 3LSF (65-250, 80-200/250)	304
CONSTRUCTIONS 3LSF (65-250, 80-200/250)	305
SECTIONAL VIEW 3PF-3LPF (32,40,50,65-125/160/200)	306
CONSTRUCTIONS 3PF-3LPF (32,40,50,65-125/160/200)	307
SECTIONAL VIEW 3LPF 80-160	308
CONSTRUCTIONS 3LPF 80-160	309
SECTIONAL VIEW 3LPF (65-250, 80-200/250)	310
CONSTRUCTIONS 3LPF (65-250, 80-200/250)	311
CONSTRUCTIONS: BALL BEARING	312
CONSTRUCTIONS: MECHANICAL SEAL (standard, H and special version)	313
CONSTRUCTIONS: MECHANICAL SEAL (L Ø22)	314
CONSTRUCTIONS: MECHANICAL SEAL (L Ø30-35)	315
CONSTRUCTIONS: MECHANICAL SEAL (HS Ø22 and special version)	316
CONSTRUCTIONS: MECHANICAL SEAL (HS Ø30 and special version)	317
CONSTRUCTIONS: COUPLING	318
CONSTRUCTIONS: COUNTERFLANGE	319
CONSTRUCTIONS: COUNTERFLANGE	320

CONTENTS

50Hz

Rev. J

- DIMENSIONS

DIMENSIONS 3SF-3LSF (32,40,50,65-125/160)	400
DIMENSIONS 3SF-3LSF (50,65-160/200)	401
DIMENSIONS 3LSF (80-160)	402
DIMENSIONS 3LSF (65-250,80)	403
DIMENSIONS 3PF-3LPF (32,40,50,65-125/160/200)	404
DIMENSIONS 3LPF (65-250,80)	405
PACKING AND WEIGHT 3SF-3LSF	406
PACKING AND WEIGHT 3PF-3LPF	407

SPECIFICATIONS

50Hz

Rev. J

Pump sizes			Version	**3SF**	**3PF**	**3LSF**	**3LPF**
			32-125	■	■	●	●
			32-160	■	■	●	●
			32-200	■	■	●	●
			40-125	■	■	●	●
			40-160	■	■	●	●
			40-200	■	■	●	●
			50-125	■	■	●	●
			50-160	■	■	●	●
			50-200	■	■	●	●
			65-125	■	■	●	●
			65-160	■	■	●	●
			65-200	■	■	●	●
			65-250	-	-	●	●
			80-160	-	-	●	●
			80-200	-	-	●	●
			80-250	-	-	▲	▲
Liquid Handled	Type of liquid			Clean water and moderately aggressive fluids			
				/		Clean water, drinking water, water contains glycol for E version	
	Temperature	min.	[°C]	- 10		-10 -20 for E version, Q1AEGG, U3U3EGG, Q1U3EGG, Q1Q1EGG, U3CEGG	
		max.		90 (Standard, E, U3CEGG,Q1AEGG, Q1Q1EGG,Q1U3EGG,U3U3EGG) 110 for (H-HS-HW-HSW)		110 (L version, H-HW-HSW) 120 for E, ES version, Q1AEGG, U3U3EGG, Q1U3EGG, Q1Q1EGG, U3CEGG	
Maximum working pressure			[MPa]	1			

■ Available also with H-HS-HSW-HW-E option for 32, 40, 50, 65-125/160/200, Q1U3EGG, U3CEGG, Q1AEGG, Q1Q1EGG, U3U3EGG (U3U3EGG not available for models 65-160/15 and 65-200).

● Available also with H-HSW-HW-E option for 32, 40, 50, 65, 80-160/200, Q1AEGG, Q1Q1EGG, Q1U3EGG, U3CEGG, U3U3EGG.

▲ Available also with H-HW-HSW-ES version only for model 80-250

- Not Available

SPECIFICATIONS

50Hz

Rev. J

Version				3SF	3PF	3LSF	3 LPF
Construction	Impeller			Closed centrifugal typ e for [32, 40, 50 version]			
				Reinforced laser welding for [40-200/11, 50-200/15]			
				Closed centrifugal three dimensi onal blades for [65 and 80 version]			
	Shaft seal type			Mechanical seal		Mechanical seal with stationary ring secured against rotation. Mechanical seal for [H-E option]	
	Bearing			Sealed b all bearing			
Pipe Connection	Suction	32-125/160/200		Flange DN50 according DIN 2532 standard			
		40-125/160/200		Flange DN65 according DIN 2532 standard			
		50-125/160/200		Flange DN65 according DIN 2532 standard			
		65-125/160/200/250		Flange DN80 according DIN 2532 standard			
		80-160/200/250		Flange DN100 according DIN 2532 standard			
	Discharge	32-125/160/200		Flange DN32 according DIN 2532 standard			
		40-125/160/200		Flange DN40 according DIN 2532 standard			
		50-125/160/200		Flange DN50 according DIN 2532 standard			
		65-125/160/200/250		Flange DN65 according DIN 2532 standard			
		80-160/200/250		Flange DN80 according DIN 2532 standard			
Material	Casing	32-125/160/200		EN 1.4301 (AISI 304)		EN 1.4404 (AISI 316L)	
		40-125/160/200					
		50-125/160/200					
		65-125/160/200					
		65-250		/		EN 1.4401 (AISI 316) Made by precision casting	
		80-160/200/250					
	Impeller	32-125/160/200		EN 1.4301 (AISI 304)		EN 1.4404 (AISI 316L)	
		40-125/160/200					
		50-125/160/200					
		65-125/160/200		EN 1.440 1 (AISI 316) Made by pre cision casting			
		65-250		/		EN 1.4401 (AISI 316) Made by precision casting	
		80-160/200/250					
	Casing cover	32-125/160/200		EN 1.4301 (AISI 304)		EN 1.4404 (AISI 316L)	
		40-125/160/200					
		50-125/160/200					
		65-125/160/200					
		65-250		/		EN 1.4401 (AISI 316) Made by precision casting	
		80-160/200/250					
	Mechanical seal	32-125/160/200		Ceramic/Carbon/NBR (For version see page 313÷327)		SiC/SiC/FPM [L version] (For version see page 313÷327)	
		40-125/160/200					
		50-125/160/200					
		65-125/160/200					
		65-250		/			
		80-160/200					
		80-250				Carbon/SiC/EPDM [ES option]	
	O-ring			NBR FPM for [H-HS-HW-HSW option] EPDM for [E, U3U3EGG, Q1Q1EGG, Q1U3EGG, U3CEGG, Q1AEGG]		FPM for [L, H-HW-HSW] EPDM for [E, ES, U3U3EGG, Q1Q1EGG, Q1U3EGG, U3CEGG, Q1AEGG]	
	Shaft	32 , 40, 50 65-125 65-160/11	d=19	EN 1.4301 (AISI 304)		EN 1.4404 (AISI 316L)	
		50-200/15	d=22				
		65-160/15 65-200	d=24				
		65-250	d=24	/		EN 1.4462 (Duplex stainless steel)	
		80-160	d=24	/		EN 1.4404 (AISI 316L)	
		80-200/22	d=24	/		EN 1.4404 (AISI 316L)	
		80-200 30-37kW	d=24	/		EN 1.4462 (Duplex stainless steel)	
		80-250	d=29	/		EN 1.4462 (Duplex stainless steel)	
	Bracket			Cast iron - aluminium			

TIPE KEY AND SELECTION CHART

50Hz

Rev. J

TYPE KEY

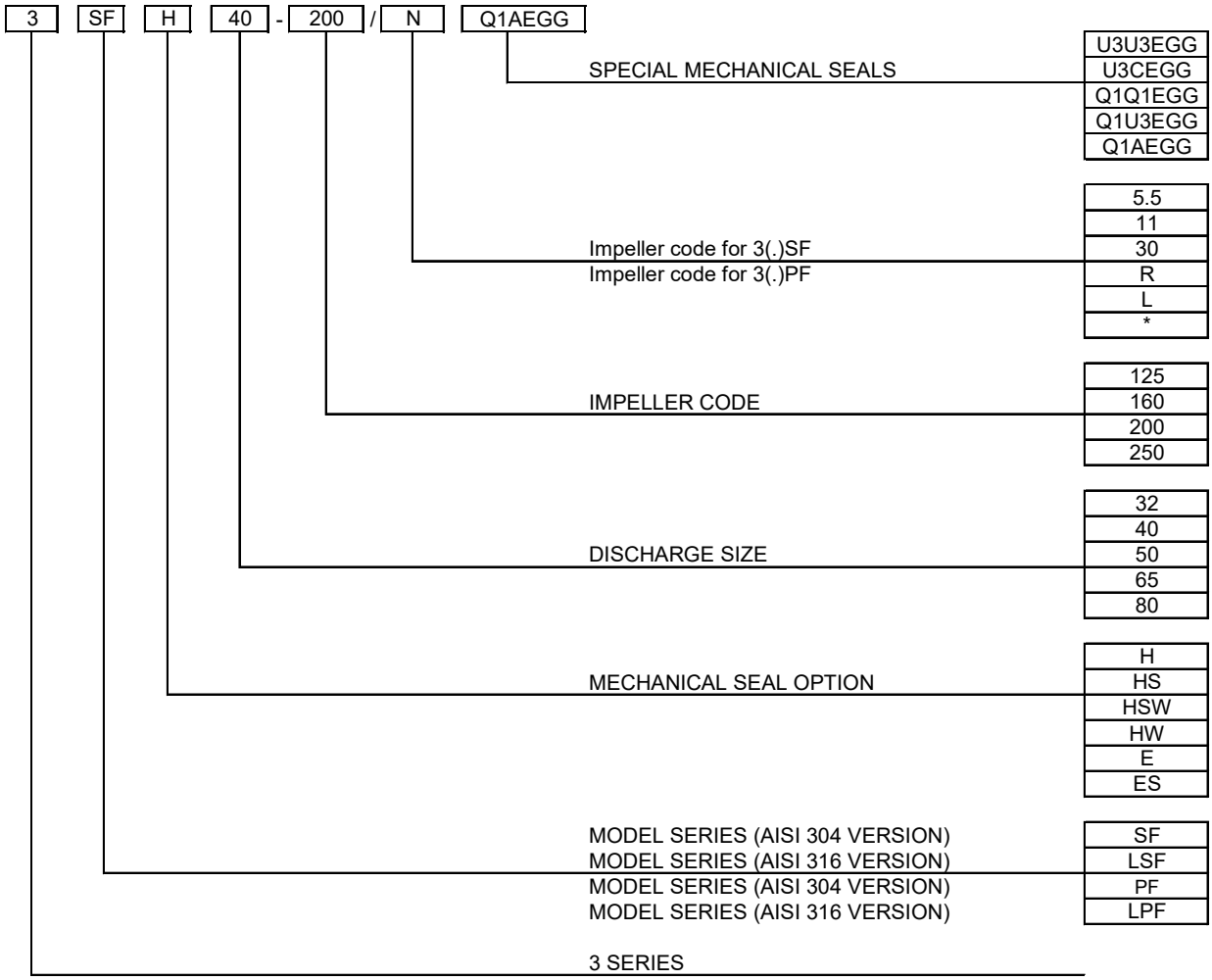

* = No indication

TIPE KEY AND SELECTION CHART

50Hz

Rev. J

SELECTION CHART

3 SERIES SF and PF version: 32, 40, 50

Pump type		kW	HP	l/min	0	100	150	200	300	333	360	400	450	500	600	700	800	1000	1200
3(.)SF	3(.) PF			m³/h	0	6	9	12	18	20	22	24	27	30	36	42	48	60	72
32-125/1.1	32-125	1,1	1,5		22,5	21	19,9	18,4	14,1	12	-	-	-	-	-	-	-	-	-
32-160/1.5	32-160/R	1,5	2		29,5	28	26,5	24,5	19,2	17	-	-	-	-	-	-	-	-	-
32-160/2.2	32-160	2,2	3		37	35,5	34	32	27	25	-	-	-	-	-	-	-	-	-
32-200/3	32-200/R	3	4		44	42	40	37,5	31	28	-	-	-	-	-	-	-	-	-
32-200/4	32-200	4	5,5		55	53,5	52	49,5	43,5	40,5	38	-	-	-	-	-	-	-	-
32-200/5.5	32-200/L	5,5	7,5		70,5	69	67,5	65	58,5	-	-	-	-	-	-	-	-	-	-
32-200/7.5		7,5	10		70,5	69	67,5	65	58,5	55,5	53	49	44	-	-	-	-	-	-
40-125/1.5	40-125/R	1,5	2		20	-	-	19	17,6	17	16,5	15,7	14,5	13,2	10,3	7	-	-	-
40-125/2.2	40-125	2,2	3		26,5	-	-	25,5	24	23,5	23	22	21	19,5	16,4	13	-	-	-
40-160/3	40-160/R	3	4		31	-	-	29,5	27,5	27	26,5	25,5	24	22,5	20	17	-	-	-
40-160/4	40-160	4	5,5		40	-	-	38,5	37	36	35,5	34,5	33	32	29	25,5	-	-	-
40-200/5.5	40-200/R	5,5	7,5		47	-	-	45,5	44	43	42,5	41	39,5	38	35	31	-	-	-
40-200/7.5	40-200	7,5	10		58	-	-	57	55,5	55	54,5	53,5	52,5	51	47,5	44	-	-	-
40-200/11	40-200/L	11	15		72	-	-	71	70	70	69,5	68,5	67,5	66	63	59	-	-	-
50-125/2.2	50-125/S	2,2	3		19	-	-	-	-	-	-	17,5	17	16,3	14,9	13,4	11,7	8	-
50-125/3	50-125/R	3	4		22,7	-	-	-	-	-	-	21,7	21,4	21	19,9	18,5	16,9	13,3	9,5
50-125/4	50-125	4	5,5		26,5	-	-	-	-	-	-	26	25,5	25	24	22,5	21,5	17,9	14
50-160/5.5	50-160/R	5,5	7,5		33	-	-	-	-	-	-	31	30,5	30	28,5	27	25,5	22	18
50-160/7.5	50-160	7,5	10		40	-	-	-	-	-	-	38,5	38	37,5	36	35	33,5	30	26
50-200/9.2	50-200/R	9,2	12,5		53	-	-	-	-	-	-	-	-	50	49	47,5	45,5	40,5	34
50-200/11	50-200	11	15		59	-	-	-	-	-	-	-	-	56	55	54	52	48	42
50-200/15	50-200/L	15	20		72	-	-	-	-	-	-	-	-	70	69	68	66	62	57

3 SERIES SF and PF version: 65, 80

Pump type		kW	HP	l/min	0	600	700	900	1300	1500	1700	1900	2100	2200	2300	2400	2500	3000	3400	3600	3800
3(.)SF	3(.) PF			m³/h	0	36	42	54	78	90	102	114	126	132	138	144	150	180	204	216	228
65-125/4	65-125/R	4	5.5		22	20	19	17	13.3	11	8,6	6.3	-	-	-	-	-	-	-	-	-
65-125/5.5	65-125	5.5	7.5		27	-	24	22	18	15.7	13.3	10.8	8	-	-	-	-	-	-	-	-
65-125/7.5	65-125/L	7.5	10		32	-	30	28	23.5	21.1	18.7	16.1	13.4	12	-	-	-	-	-	-	-
65-160/7.5	65-160/S	7.5	10		32	-	30	29	24.8	22.5	19.9	17.1	14.2	-	-	-	-	-	-	-	-
65-160/9.2	65-160/R	9.2	13		37	-	35	33	28.8	26.5	23.9	21.1	18.3	16.8	-	-	-	-	-	-	-
65-160/11	65-160	11	15		41	-	39	37	33.1	30.9	28.4	25.8	23	21.5	20	-	-	-	-	-	-
65-160/15	65-160/L	15	20		48	-	46	44	40	37.8	35.3	32.6	29.6	28	26.5	-	-	-	-	-	-
65-200/15	65-200/R	15	20		54	-	51	49	44	41.5	38.4	35.3	31.8	30	-	-	-	-	-	-	-
65-200/18.5	65-200	19	25		61	-	59	57	51.5	49	46	43	39.7	38	36.3	-	-	-	-	-	-
65-200/22	65-200/L	22	30		67	-	66	64	59.5	57	54	51	48	46.5	45	-	-	-	-	-	-
65-250/30	65-250	30	40		78	-	-	77	73.5	71	68	64.5	60	57.5	55	52	-	-	-	-	-
65-250/37	65-250/L	37	50		89	-	-	88	85.5	83	80.5	77.5	74	72	70	67.5	65	-	-	-	-
80-160/11	80-160/S	11	15		29	-	-	-	27.3	26.4	25.4	24.2	23	22.4	21.8	21.1	20.4	16.4	12.5	-	-
80-160/15R	80-160/R	15	20		32	-	-	-	30.5	29.7	28.8	27.7	26.5	25.9	25.3	24.6	24	20.1	16.5	14.5	-
80-160/15	80-160	15	20		35	-	-	-	34	33.3	32.5	31.5	30.5	30	29.4	28.8	28.1	24.4	21	19.1	17
80-160/18.5	80-160/L	19	25		40	-	-	-	39	38.4	37.6	36.7	35.7	35.2	34.7	34.1	33.5	30	26.4	24.4	22.3
80-200/22	80-200/R	22	30		50	-	-	-	48	47	45.5	44.5	43	42	41	40	39	33.2	27.8	25	-
80-200/30	80-200	30	40		60	-	-	-	58.5	58	57	56	54.5	54	53	52	51	46.5	41.5	39	36.1
80-200/37	80-200/L	37	50		66	-	-	-	64	63	62	61	59.5	59	58	57.5	56.5	51.5	47	44.5	41.5
80-250/37	80-250/R	37	50		73	-	-	-	71.5	70.5	68.5	66.5	64	63	61.5	60	58.5	48.5	38	-	-
80-250/45	80-250	45	60		84	-	-	-	82.5	81.5	80	78	76	75	73.5	72.5	71	62	53	48	42.5
80-250/55	80-250/L	55	75		95	-	-	-	93.5	92.5	91.5	90	88.5	87.5	86.5	85.5	84	76.5	68.5	64.5	60

PERFORMANCE CURVE

50Hz

Rev. J

PERFORMANCE RANGE

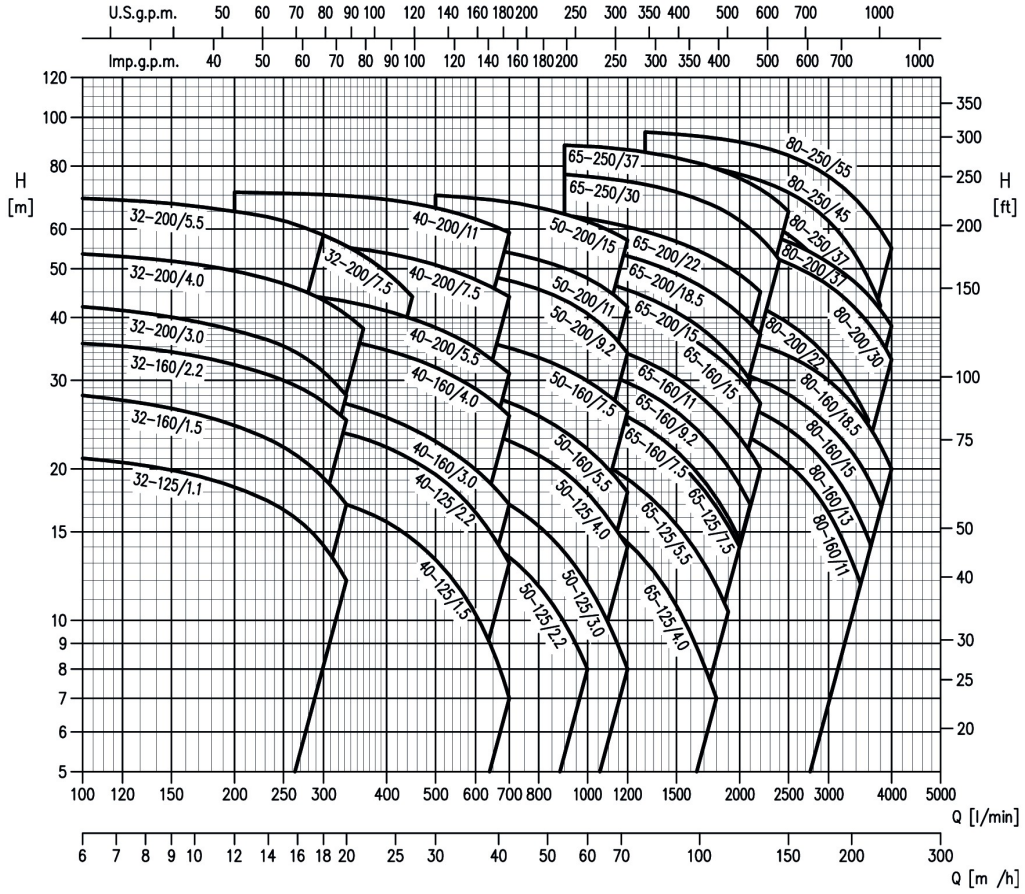

PERFORMANCE CURVE SPECIFICATIONS

The specifications below qualify the curves shown on the following pages.

Tolerances according to ISO 9906:2012 - Grade 3B
The curves refer to effective speed of asynchronous motors at 50 Hz, 2 poles.
Measurements were carried out with clean water at 20°C of temperature and with a kinematic viscosity of Q = 1 mm^2/s (1 cSt)
The NPSH curve is an average curve obtained in the same conditions of performance curves. During the pump selection, consider to get a safety margin of at least 1 m.
The continuos curves indicate the recommended working range. The dotted curve is only a guide.
In order to avoid the risk of over-heating, the pumps should not be used at a flow rate below 10% of best efficiency point.

Symbols explanation:

Q = volume flow rate
H = total head
P_2 = pump power input (shaft power)
K = pump efficiency
NPSH = net positive suction head required by the pump

PERFORMANCE CURVE

50Hz

Rev. J

MEI INDEX SPECIFICATION

The minimum efficiency index (MEI) is a measure of the quality of a pump size in respect to its mean efficiency. The minimum efficiency index is based on the hydraulic efficiency and on the head at the best efficiency point.

The efficiency of a pump with trimmed impeller is usually lower than that of a pump with the full impeller diameter. The trimming of the impeller will adapt the pump to a fixed duty point,leading to a reducedenergy consumption. The minimum efficiency index (MEI) is based on the full impeller diameter.

The operation of these water pumps with variabile duty points may be more efficient end economical when controlled, for example, by the use of a variable speed drive that matches the pump duty to the system.

MEI = 0.4 for ESCC 2900 rpm

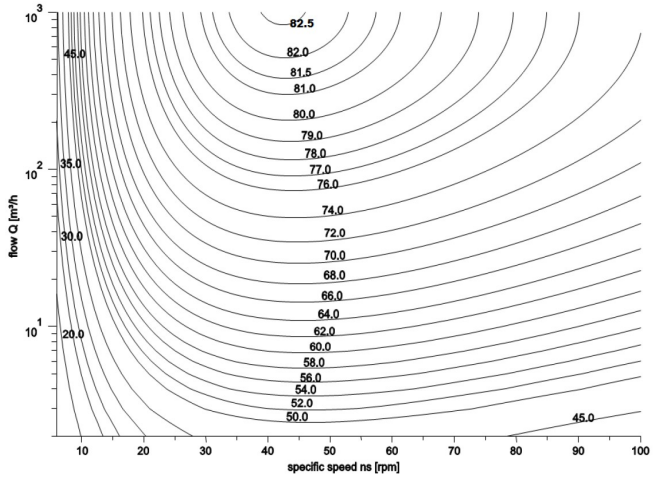

MEI = 0.7 for ESCC 2900rpm

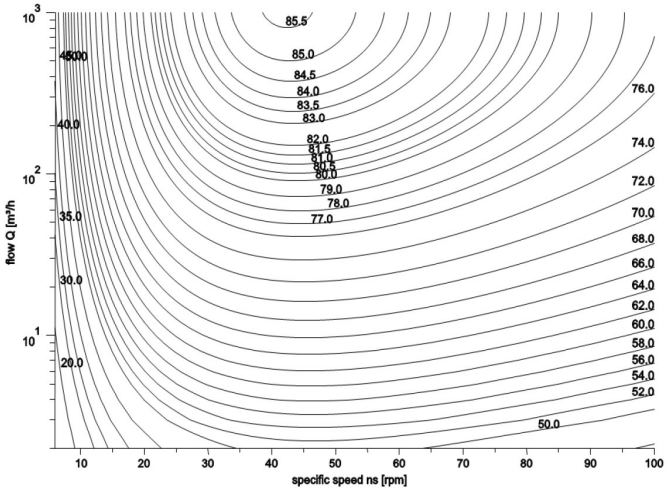

MEI = 0.4 for ESOB 2900 rpm

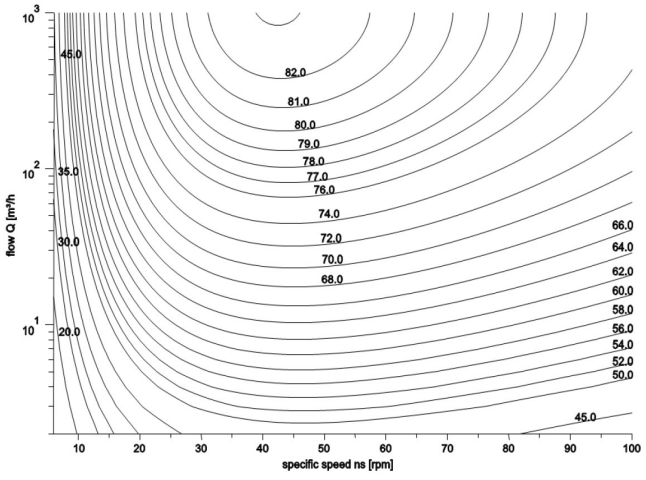

MEI = 0.7 for ESOB 2900rpm

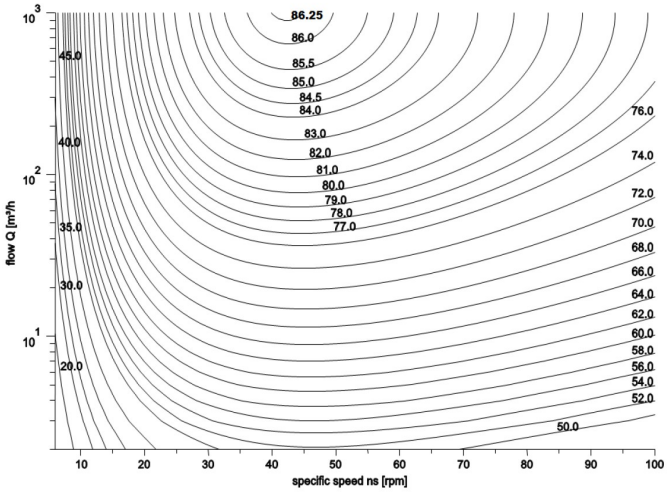

PERFORMANCE CURVE

50Hz

Rev. J

3(.)SF 32-125/1.1 and **3(.)PF 32-125** (1.1kW) **MEI > 0.40** – impeller diameter = 133 mm

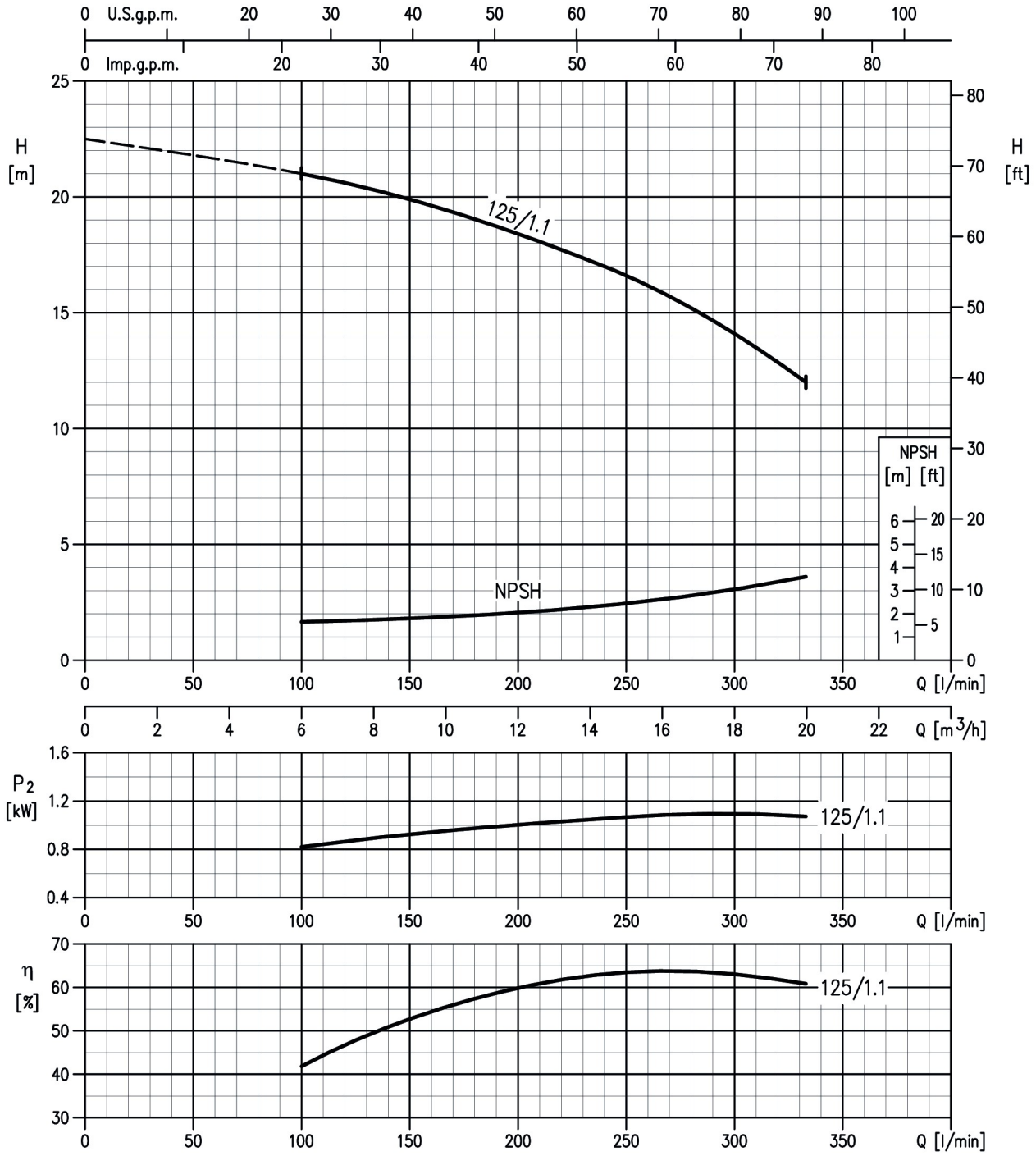

Rotation speed ≈2900 min-1
Test standard: ISO 9906:2012 - Grade 3B

PERFORMANCE CURVE

50Hz

Rev. J

3(.)SF 32-160/1.5 and **3(.)PF 32-160/R** (1.5kW) **MEI > 0.70** – impeller diameter = 151 mm
3(.)SF 32-160/2.2 and **3(.)PF 32-160** (2.2kW) **MEI > 0.70** – impeller diameter = 166 mm

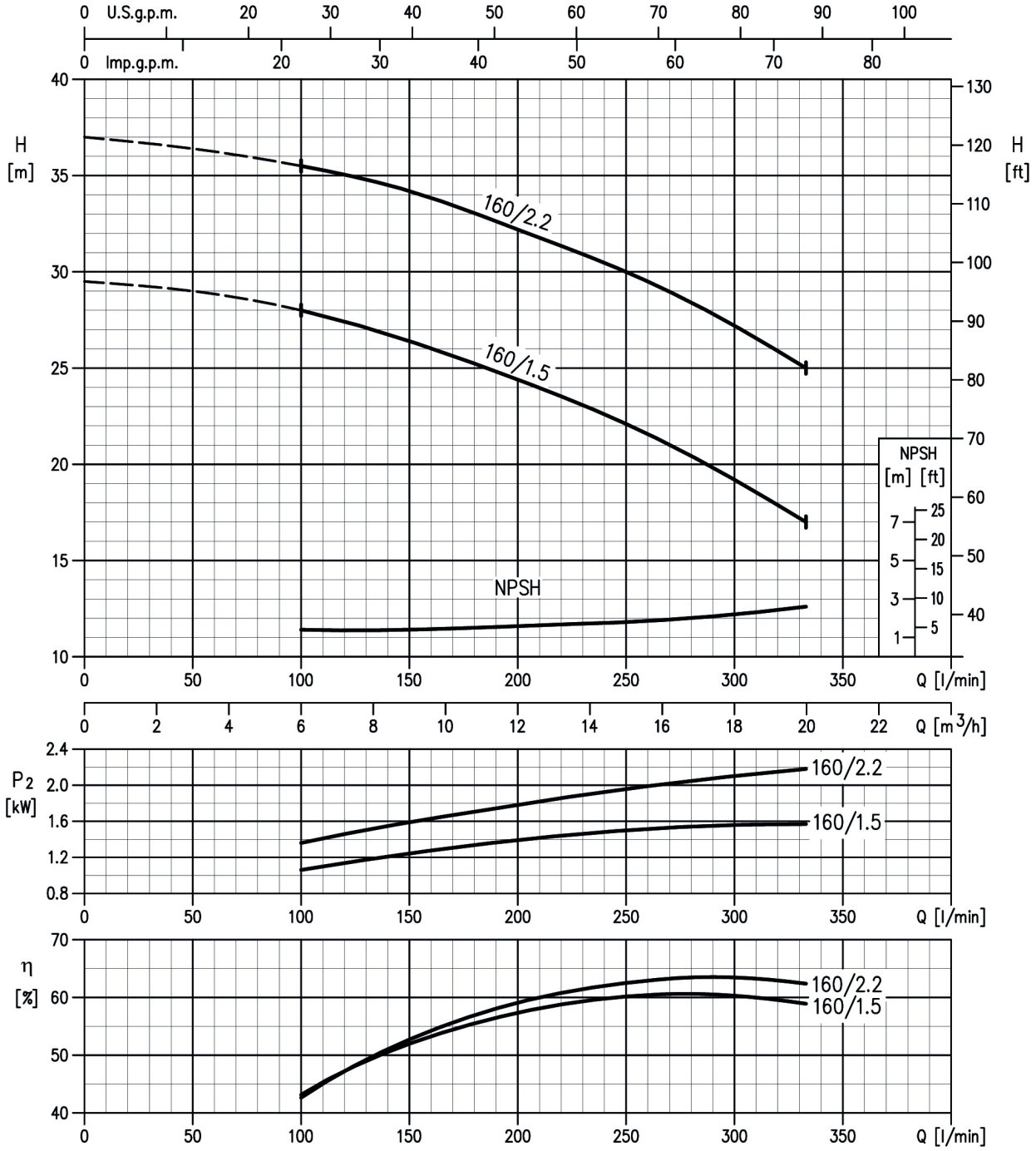

Rotation speed ≈2900 min-1
Test standard: ISO 9906:2012 - Grade 3B

PERFORMANCE CURVE

50Hz

Rev. J

3(.)SF 32-200/3 and **3(.)PF 32-200/R** (3.0kW) **MEI > 0.70** – impeller diameter = 186 mm
3(.)SF 32-200/4 and **3(.)PF 32-200** (4.0kW) **MEI > 0.70** – impeller diameter = 200 mm
3(.)SF 32-200/5.5 and **3(.)PF 32-200/L** (5.5kW) **MEI > 0.70** – impeller diameter = 224 mm
3(.)SF 32-200/7.5 and **3(.)PF 32-200/L** (7.5kW) **MEI > 0.70** – impeller diameter = 224 mm

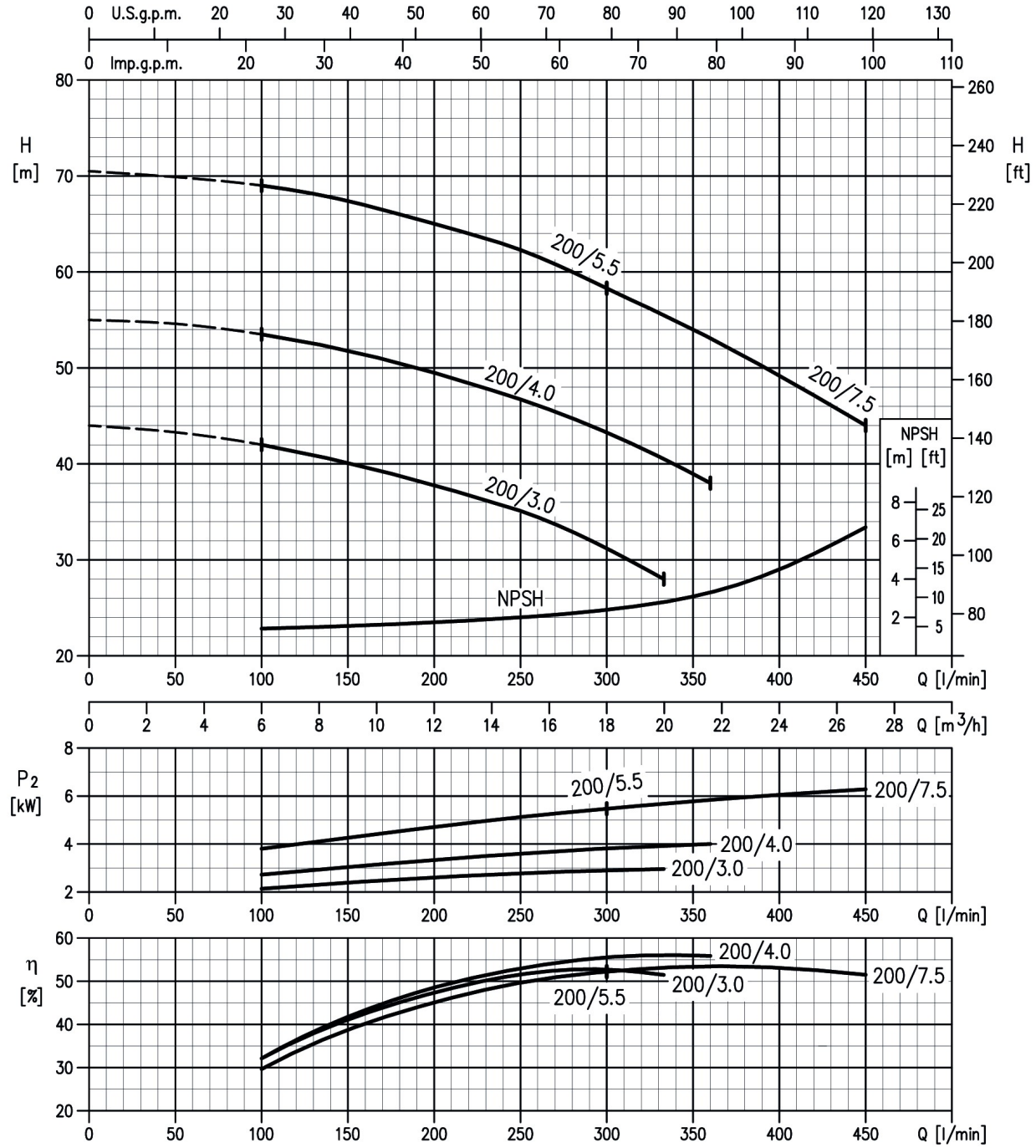

Rotation speed ≈2900 min-1
Test standard: ISO 9906:2012 - Grade 3B

PERFORMANCE CURVE

50Hz

Rev. J

3(.)SF 40-125/1.5 and **3(.)PF 40-125/R** (1.5kW) **MEI > 0.70** – impeller diameter = 125 mm
3(.)SF 40-125/2.2 and **3(.)PF 40-125** (2.2kW) **MEI > 0.70** – impeller diameter = 140 mm

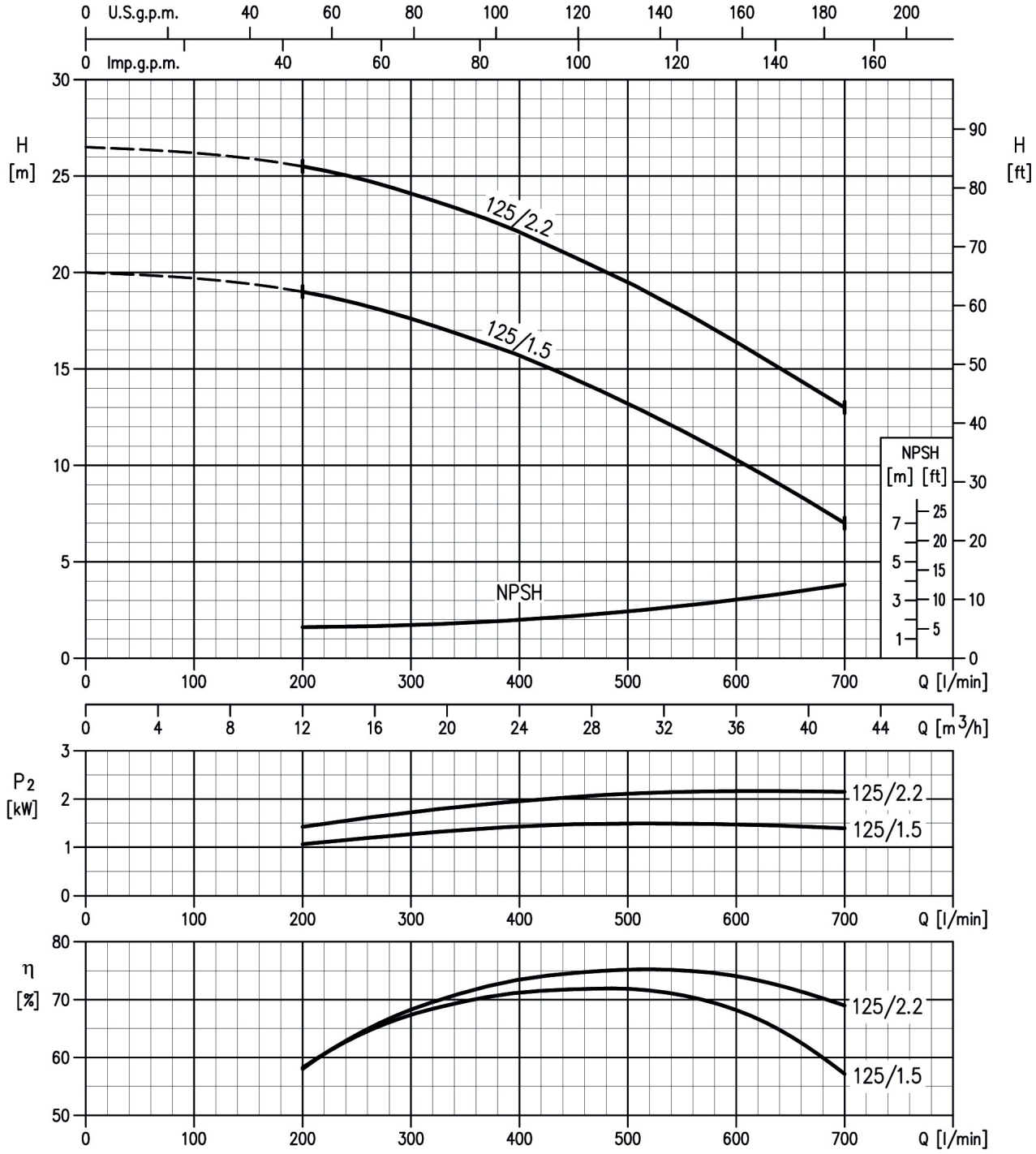

Rotation speed ≈2900 min-1
Test standard: ISO 9906:2012 - Grade 3B

PERFORMANCE CURVE

50Hz

Rev. J

3(.)SF 40-160/3 and **3(.)PF 40-160/R** (3.0kW) **MEI > 0.70** – impeller diameter = 151 mm
3(.)SF 40-160/4 and **3(.)PF 40-160** (4.0kW) **MEI > 0.70** – impeller diameter = 166 mm

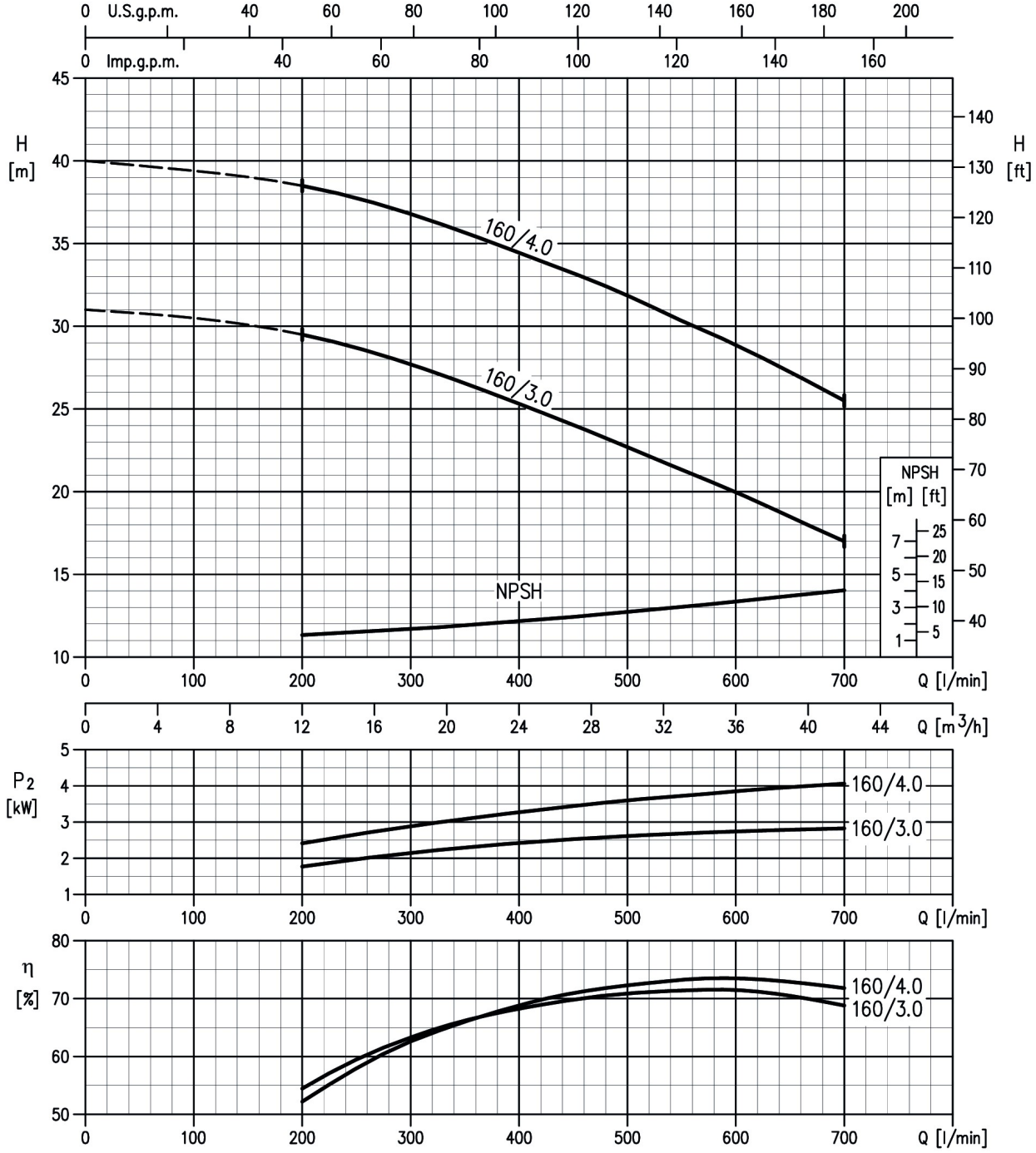

Rotation speed ≈2900 min-1
Test standard: ISO 9906:2012 - Grade 3B

PERFORMANCE CURVE

50Hz

Rev. J

3(.)SF 40-200/5.5 and **3(.)PF 40-200/R** (5.5kW) **MEI > 0.70** – impeller diameter = 183 mm
3(.)SF 40-200/7.5 and **3(.)PF 40-200** (7.5kW) **MEI > 0.70** – impeller diameter = 200 mm
3(.)SF 40-200/1 and **3(.)PF 40-200/L** (11kW) **MEI > 0.70** – impeller diameter = 224 mm

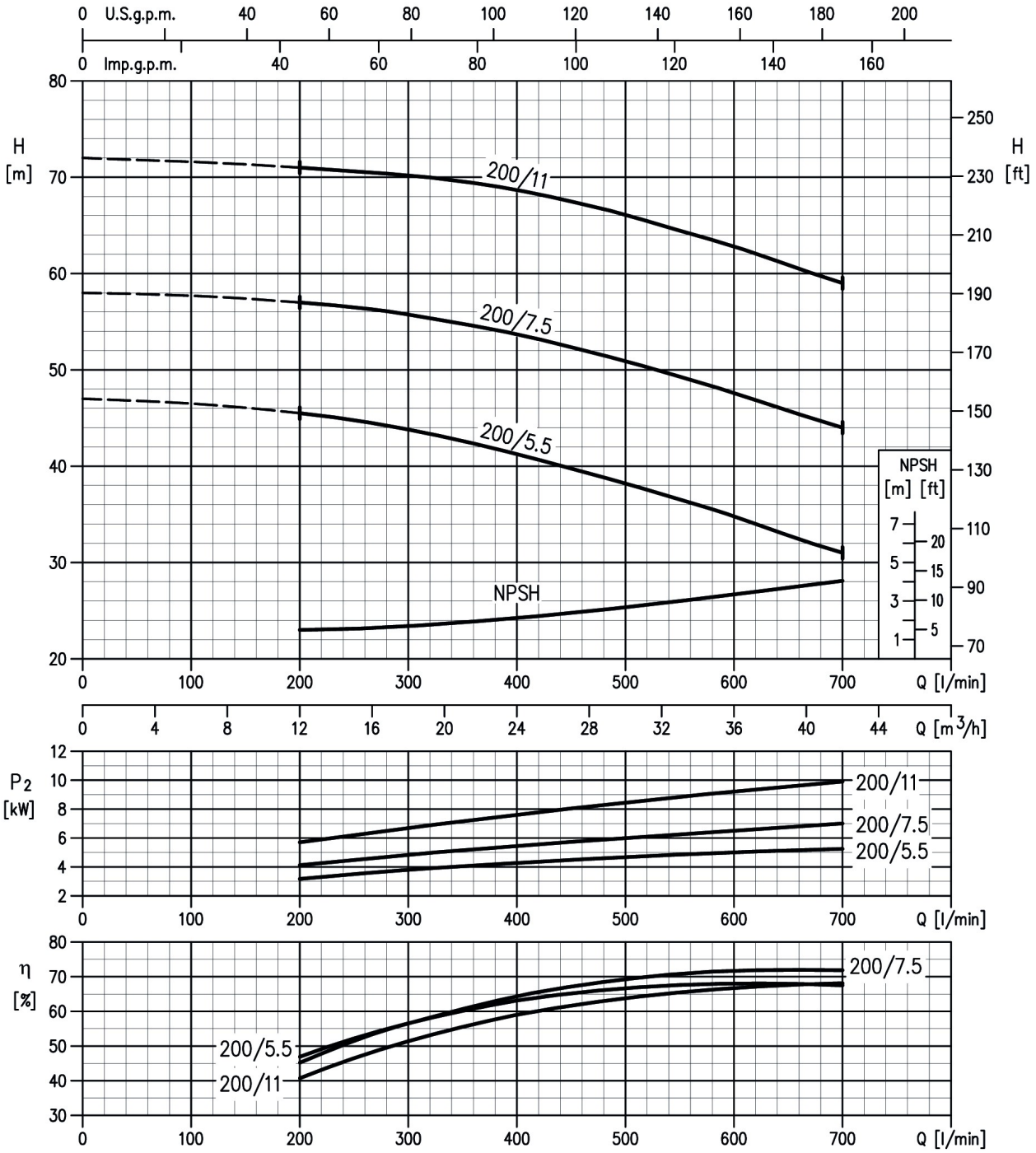

Rotation speed ≈2900 min-1
Test standard: ISO 9906:2012 - Grade 3B

PERFORMANCE CURVE

50Hz

Rev. J

3(.)SF 50-125/2.2 and **3(.)PF 50-125/S** (2.2kW) **MEI > 0.50** – impeller diameter = 126 mm
3(.)SF 50-125/3 and **3(.)PF 50-125/R** (3.0kW) **MEI > 0.50** – impeller diameter = 131 mm
3(.)SF 50-125/4 and **3(.)PF 50-125** (4.0kW) **MEI > 0.50** – impeller diameter = 140 mm

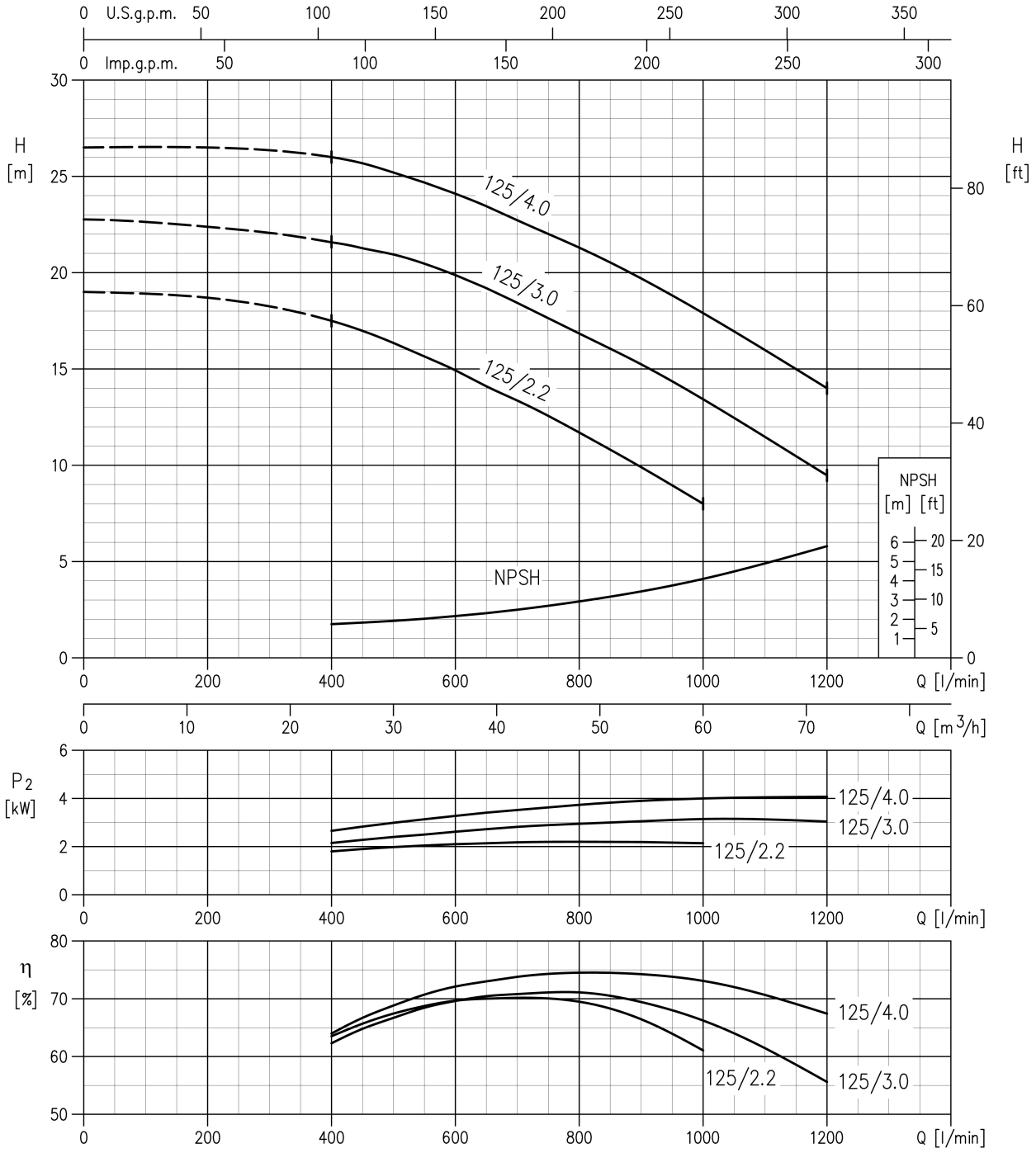

Rotation speed ≈2900 min-1
Test standard: ISO 9906:2012 - Grade 3B

PERFORMANCE CURVE

50Hz

Rev. J

3(.)SF 50-160/5.5 and **3(.)PF 50-160/R** (5.5kW) **MEI > 0.40**– impeller diameter = 154 mm
3(.)SF 50-160/7.5 and **3(.)PF 50-160** (7.5kW) **MEI > 0.40**– impeller diameter = 166 mm

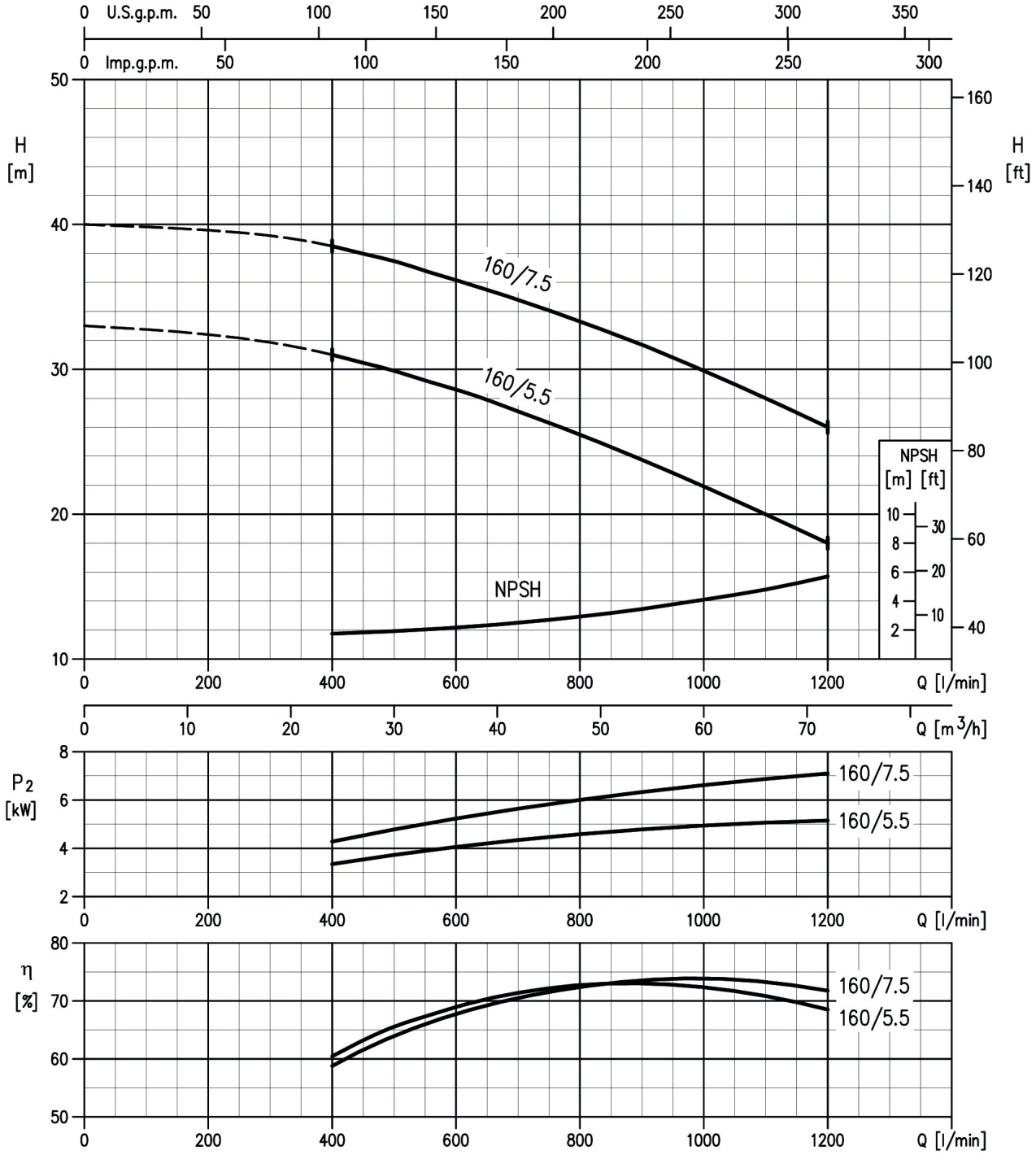

Rotation speed ≈2900 min-1
Test standard: ISO 9906:2012 - Grade 3B

PERFORMANCE CURVE

50Hz

Rev. J

3(.)SF 50-200/9.2 and **3(.)PF 50-200/R** (9.2kW) **MEI > 0.70** – impeller diameter = 191 mm
3(.)SF 50-200/11 and **3(.)PF 50-200** (11kW) **MEI > 0.70** – impeller diameter = 200 mm
3(.)SF 50-200/15 and **3(.)PF 50-200/L** (15kW) **MEI > 0.40** – impeller diameter = 224 mm

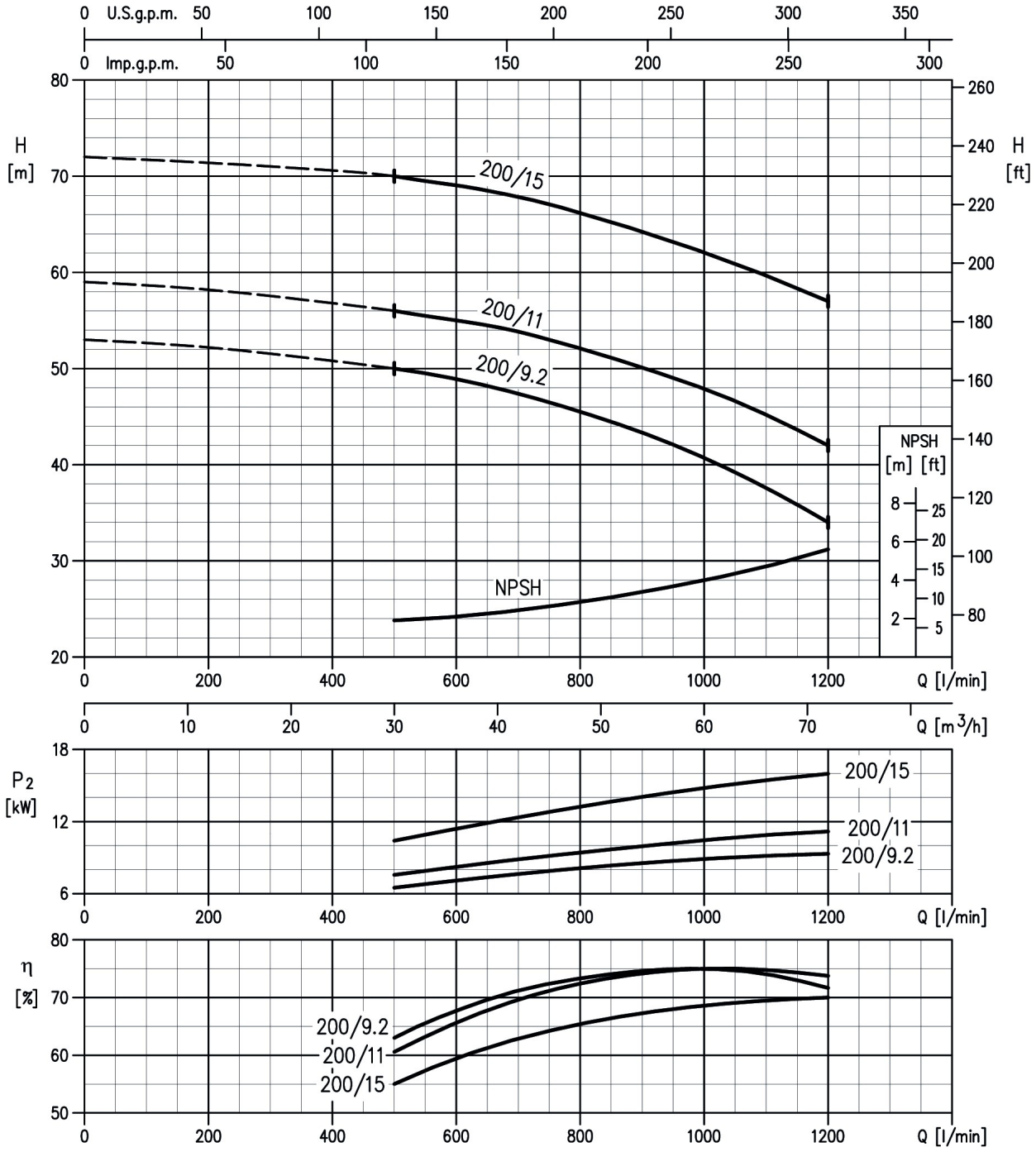

Rotation speed ≈2900 min-1
Test standard: ISO 9906:2012 - Grade 3B

PERFORMANCE CURVE

50Hz

Rev. J

3(.)SF 65-125/4 and **3(.)PF 65-125/R** (4.0kW) **MEI > 0.50** – impeller diameter = 128 mm
3(.)SF 65-125/5.5 and **3(.)PF 65-125** (5.5kW) **MEI > 0.50** – impeller diameter = 138 mm
3(.)SF 65-125/7.5 and **3(.)PF 65-125/L** (7.5kW) **MEI > 0.50** – impeller diameter = 149 mm

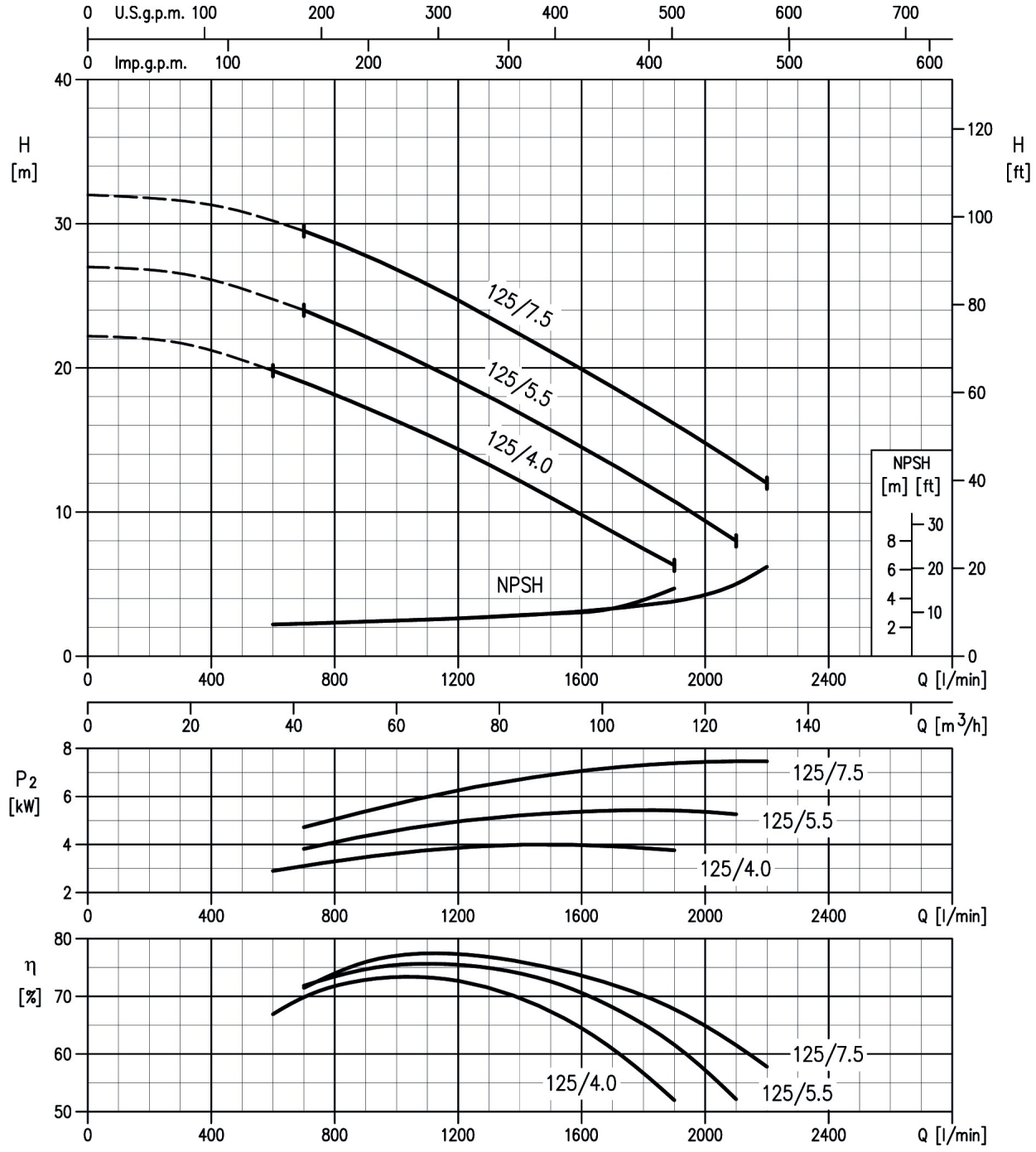

Rotation speed ≈2900 min-1
Test standard: ISO 9906:2012 - Grade 3B

PERFORMANCE CURVE

50Hz

Rev. J

3(.)SF 65-160/7.5 and **3(.)PF 65-160/S** (7.5kW) **MEI > 0.70**– impeller diameter = 153 mm
3(.)SF 65-160/9.2 and **3(.)PF 65-160/R** (9.2kW) **MEI > 0.70**– impeller diameter = 161 mm
3(.)SF 65-160/11 and **3(.)PF 65-160** (11kW) **MEI > 0.70**– impeller diameter = 168 mm
3(.)SF 65-160/15 and **3(.)PF 65-160/L** (15kW) **MEI > 0.70**– impeller diameter = 178 mm

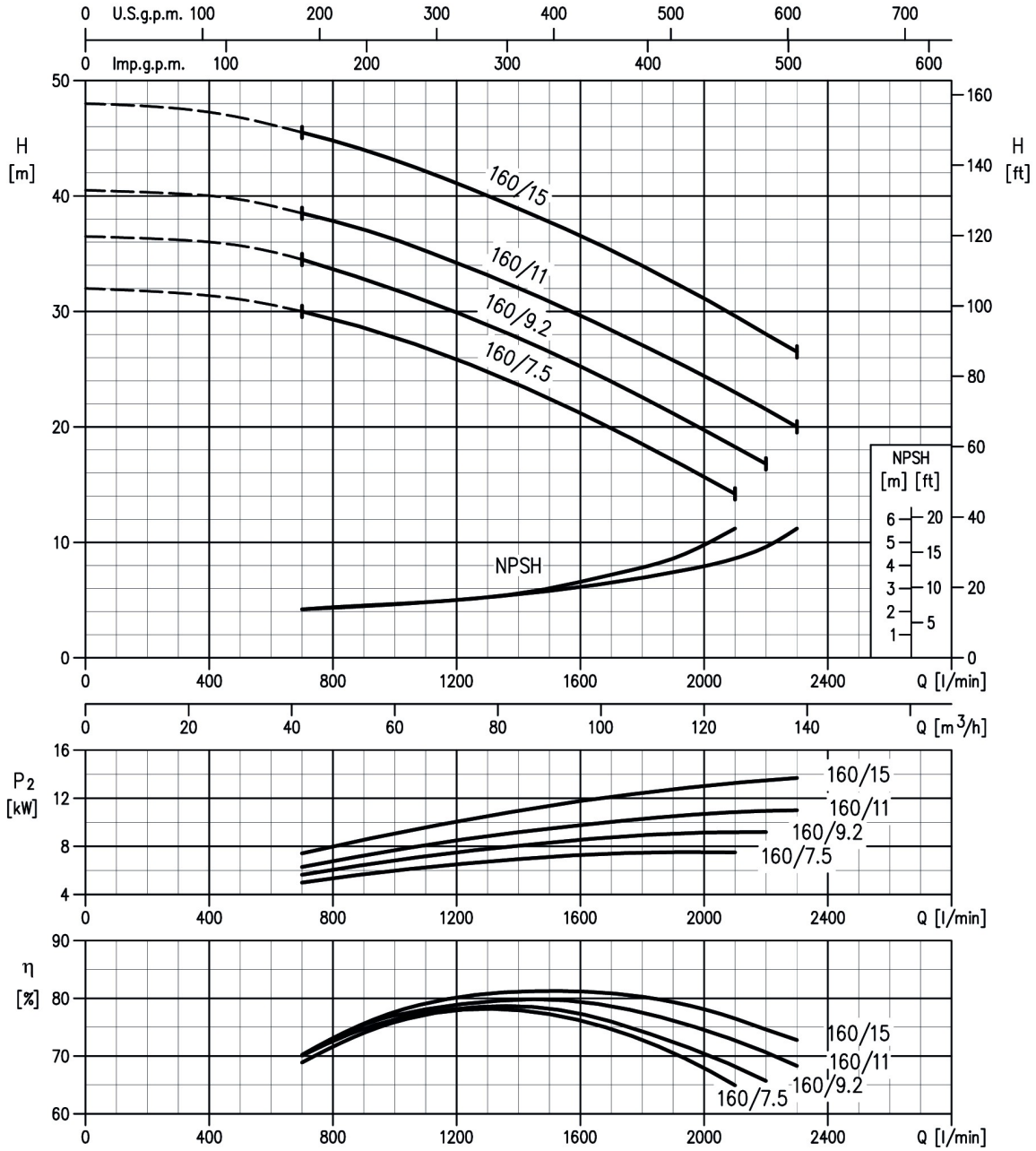

Rotation speed ≈2900 min-1
Test standard: ISO 9906:2012 - Grade 3B

PERFORMANCE CURVE

50Hz

Rev. J

3(.)SF 65-200/15 and **3(.)PF 65-200/R** (15kW) **MEI > 0.70** – impeller diameter = 190 mm
3(.)SF 65-200/18.5 and **3(.)PF 65-200** (18.5kW) **MEI > 0.70** – impeller diameter = 201 mm
3(.)SF 65-200/22 and **3(.)PF 65-200/L** (22kW) **MEI > 0.70** – impeller diameter = 212 mm

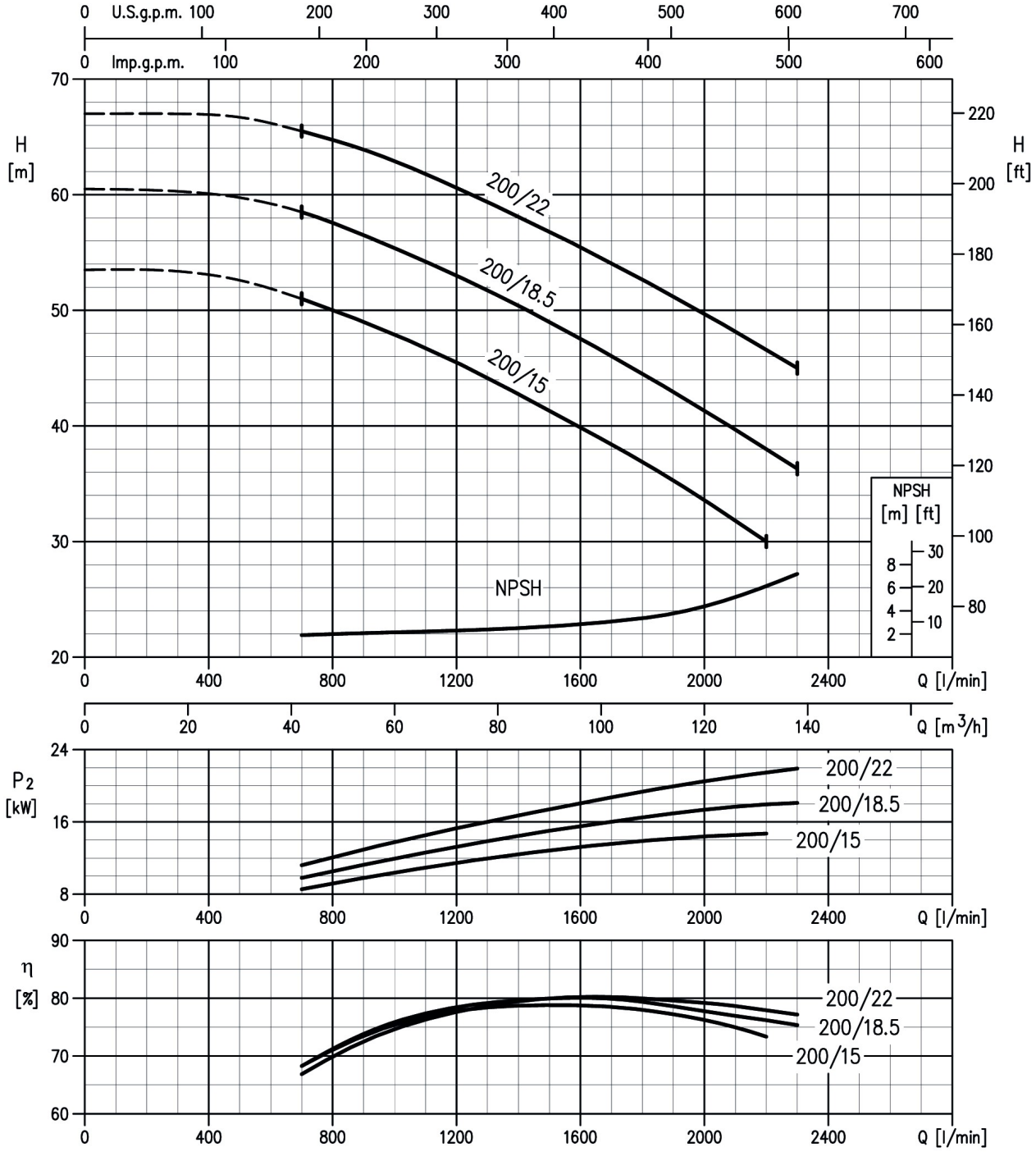

Rotation speed ≈2900 min-1
Test standard: ISO 9906:2012 - Grade 3B

PERFORMANCE CURVE

50Hz

Rev. J

3LSF 65-250/30 and **3LPF 65-250** (30kW) **MEI > 0.70** – impeller diameter = 235 mm
3LSF 65-250 and **3LPF 65-250/L** (37kW) **MEI > 0.70** – impeller diameter = 250 mm

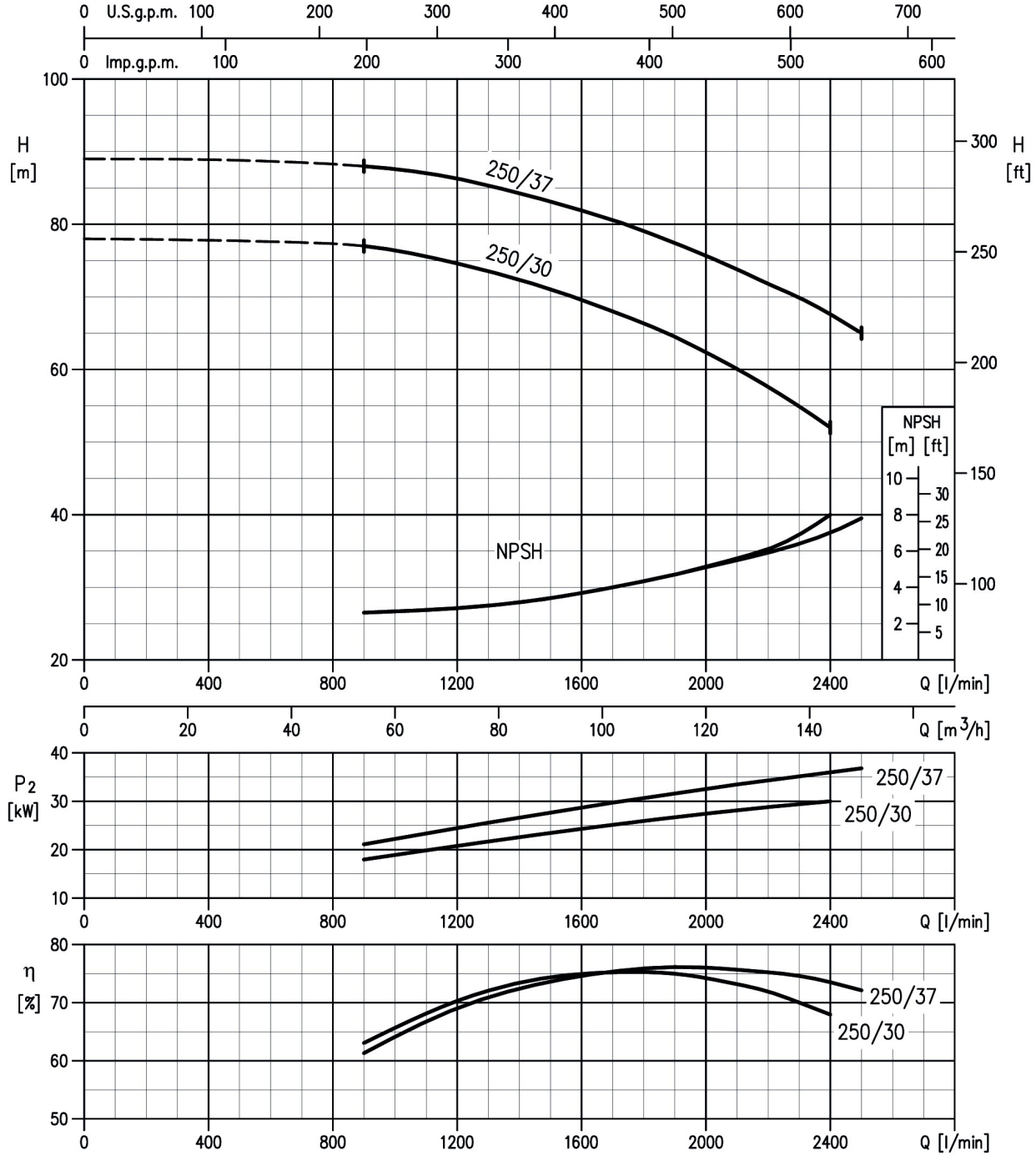

Rotation speed ≈2900 min-1
Test standard: ISO 9906:2012 - Grade 3B

PERFORMANCE CURVE

50Hz

Rev. J

3LSF 80-160/11	and **3LPF 80-160/S**	(11kW)	**MEI > 0.70** – impeller diameter = 154 mm
3LSF 80-160/15R	and **3LPF 80-160/R**	(15kW)	**MEI > 0.70** – impeller diameter = 160 mm
3LSF 80-160/15	and **3LPF 80-160**	(15kW)	**MEI > 0.70** – impeller diameter = 165 mm
3LSF 80-160/18.5	and **3LPF 80-160/L**	(18.5kW)	**MEI > 0.70** – impeller diameter = 174 mm

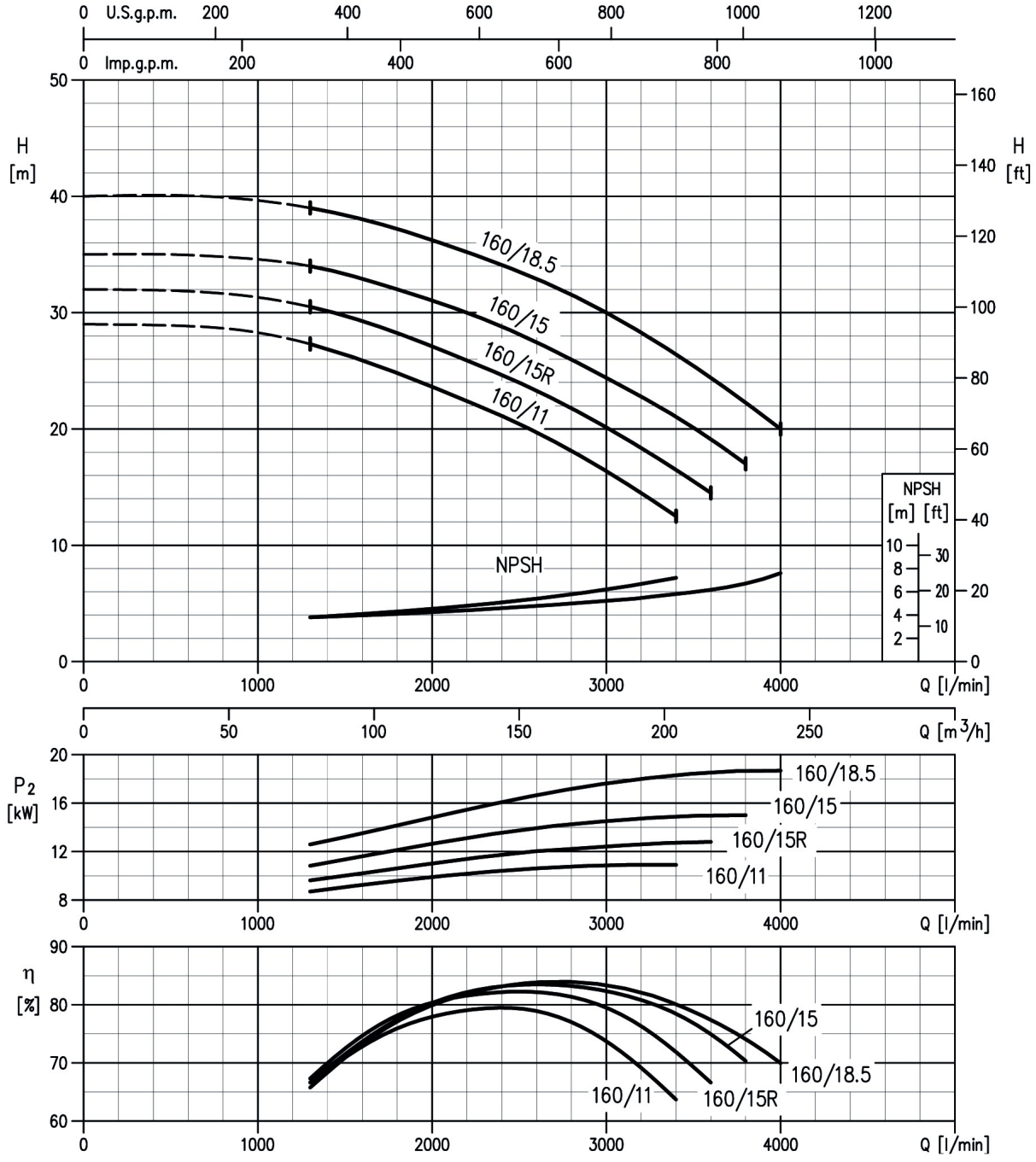

Rotation speed ≈2900 min-1
Test standard: ISO 9906:2012 - Grade 3B

PERFORMANCE CURVE

50Hz

Rev. J

3LSF 80-200/22 and **3LPF 80-200/R** (22kW) **MEI > 0.60** – impeller diameter = 196 mm
3LSF 80-200/30 and **3LPF 80-200** (30kW) **MEI > 0.60** – impeller diameter = 211 mm
3LSF 80-200/37 and **3LPF 80-200/L** (37kW) **MEI > 0.60** – impeller diameter = 219 mm

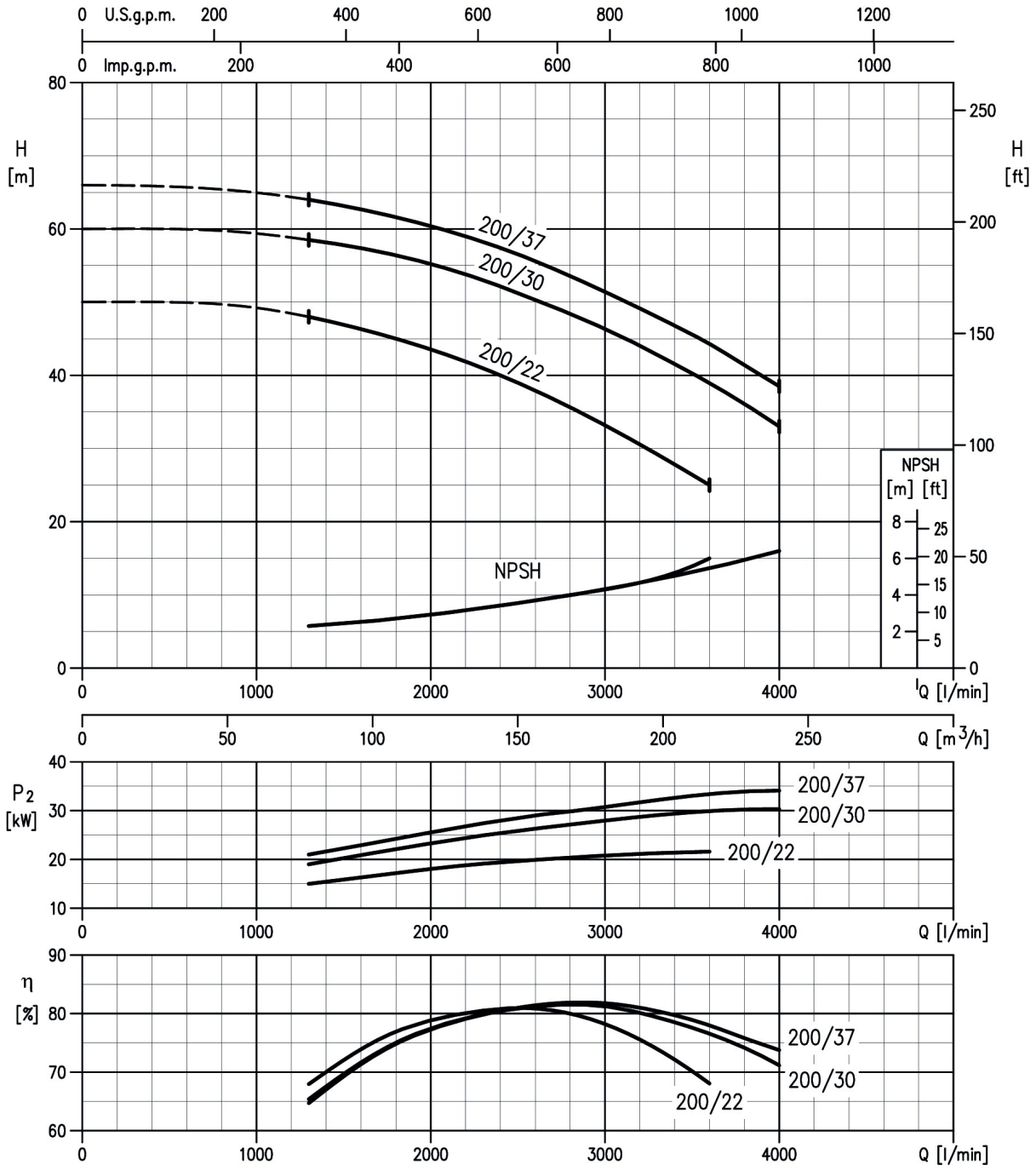

Rotation speed ≈2900 min-1
Test standard: ISO 9906:2012 - Grade 3B

PERFORMANCE CURVE

50Hz

Rev. J

3LSF 80-250/37 and **3LPF 80-250/R** (37kW) **MEI > 0.60** – impeller diameter = 230 mm
3LSF 80-250/45 and **3LPF 80-250** (45kW) **MEI > 0.60** – impeller diameter = 245 mm
3LSF 80-250/55 and **3LPF 80-250/L** (55kW) **MEI > 0.60** – impeller diameter = 259 mm

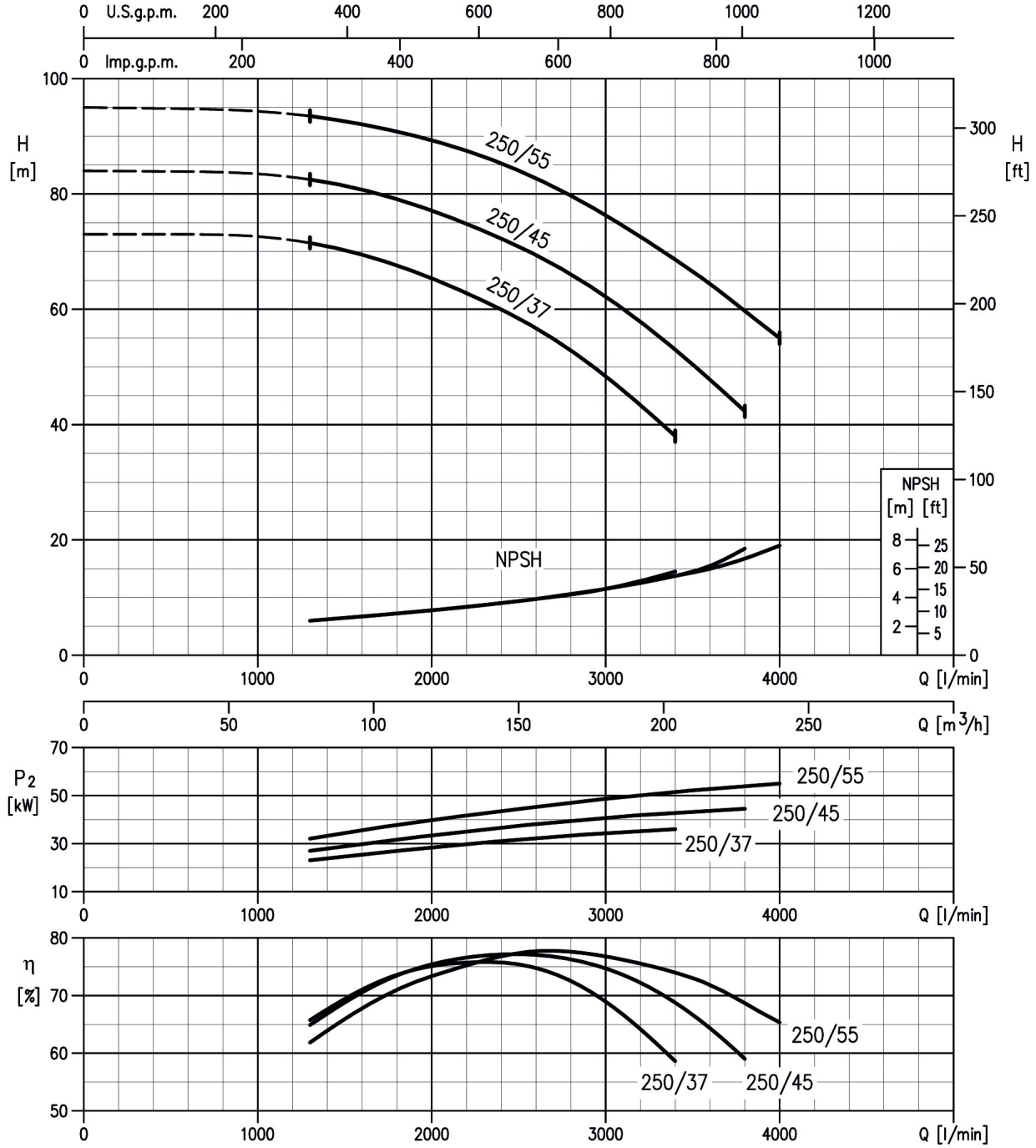

Rotation speed ≈2900 min-1
Test standard: ISO 9906:2012 - Grade 3B

CONSTRUCTION

50Hz

Rev. J

SECTIONAL VIEW DRAWING
3(.)SF 32, 40, 50, 65

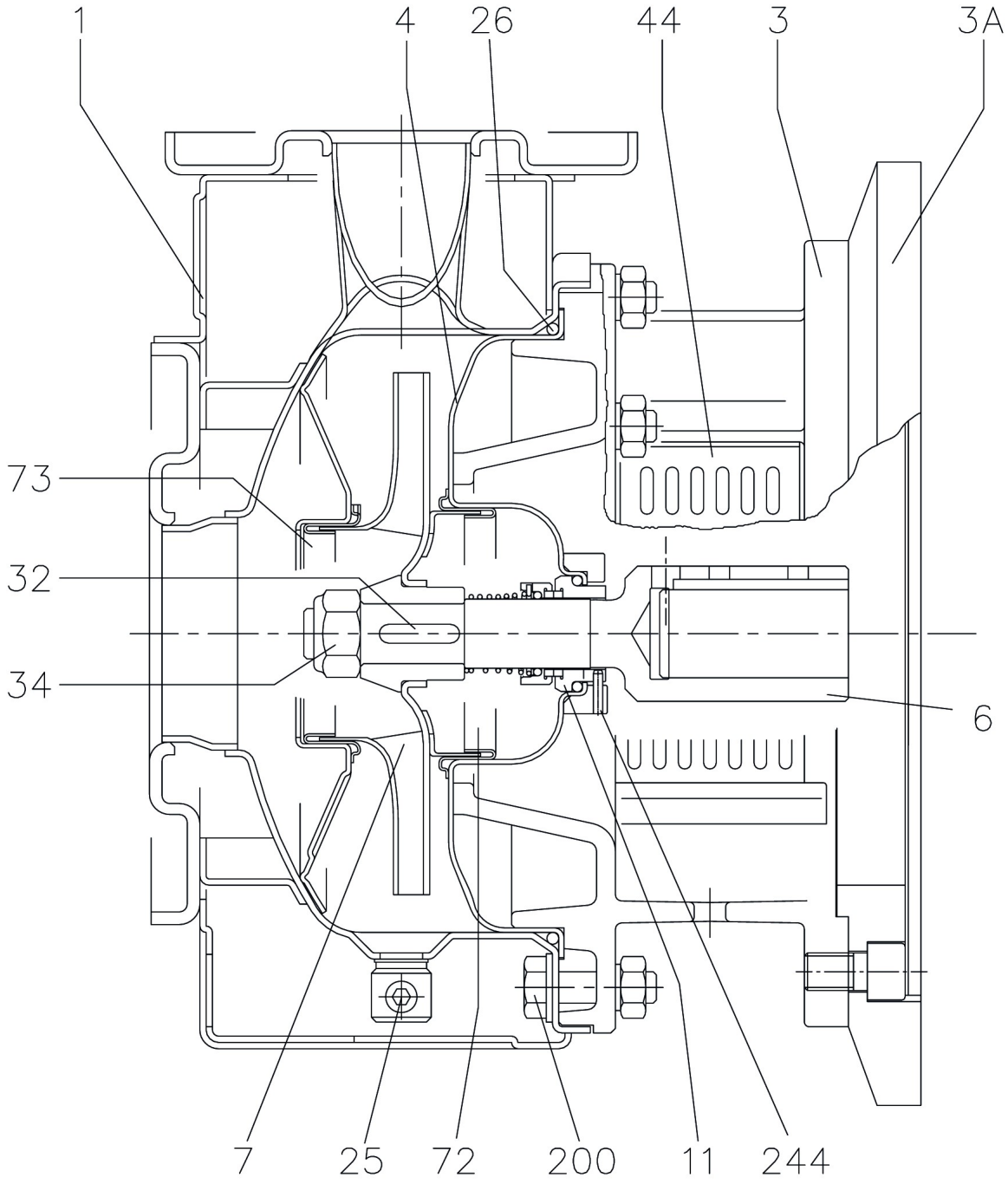

CONSTRUCTION

50Hz

Rev. J

SECTIONAL VIEW TABLE
3(.)SF 32, 40, 50, 65

N°	PART NAME		MATERIAL 3SF	MATERIAL 3LSF	DIMENSIONS	STANDARD	Q.TY
1	Casing		EN 1.4301 (AISI 304)	EN 1.4404 (AISI 316L)			1
3	Motor bracket		Cast iron EN-G JL-200-EN 1561				1
3A	Adapter ring	[1]	Cast iron EN-G JL-200-EN 1561				1
4	Casing cover		EN 1.4301 (AISI 304)	EN 1.4404 (AISI 316L)			1
6	Coupling - Part in contact with liquid		EN 1.4301 (AISI 304)	EN 1.4404 (AISI 316L)	See table p. 318		1
7	Impeller	32,40,50	EN 1.4301 (AISI 304)	EN 1.4404 (AISI 316L)			1
		65-125/160/200	EN 1.4401 (AISI 316)				
11	Mechanical seal		Carbon/Ceramic/NBR	SiC/SiC/FPM	See p. 313-317		1
25	Draing plug		EN 1.4401 (AI SI 316) / PTFE		R 1/8" L=8	DIN 906	1
26	"O" ring	32-125, 40-125	NBR [5]	FPM	158.11x5.34	OR 6625	1
		32-160, 40-160 , 50-125, 65-125			183.52x5.34	OR 6720	
		32-200, 40-200, 50-160, 50-200, 65-160, 65-200			227.96x5.34	OR 6895	
32	Key	Up to 11 kW	EN 1.4301 (AISI 304)	EN 1.4401 (AISI 316)	6x6x25	UNI 6604	1
		15 kW and above			8 x7x 30		
34	Impeller nut	Up to 11kW	EN 1.4301 (AISI 304)	EN 1.4404 (AISI 316L)	M16x1.5	UNI 7474	1
		50-200/15			M18x1.5		
		15 kW and above			M20x1.5		
44	Protection		EN 1.4301 (AISI 304)			EBARA DRAWING	1
72	Casing ring	[2]	EN 1.4301 (AISI 304)	EN 1.4404 (AISI 316L)			1
73	Casing ring (not for 65 version)		EN 1.4301 (AISI 304)	EN 1.4404 (AISI 316L)			1
200	Screw	32-125, 40-125	Stainless steel A2 70 class ISO 3506/ 1		M 8x30	UNI 5739	8
		40-160, 40-200, 50-125, 50-160, 50-200, 65-125, 65-160, 65-200			M 10x35	UNI 5739	[3]
244	Pin	[4]	/	EN 1.4301 (AISI 304)	4x15		1

Counterflange kit on request, see table p.319-320

[1] Only for 65-125/5.5 and 65-125/7.5
[2] For version 32-200, 40-200, 50-160, 50-200
[3] N° for 1 unit=10 for 32-160, 40-160, 50-125, 65-125
N° for 1 unit=12 for 32-200, 40-200, 50-160, 50-200, 65-160, 65-200
[4] Only for 65-160/15 and 65-200
[5] FPM for H-HS-HW-HSW version
EPDM for E version, Q1AEGG, Q1U3EGG, U3CEGG, Q1Q1EGG, U3U3EGG
U3U3EGG not available for models 65-160/15 and 65-200

CONSTRUCTION

50Hz

Rev. J

SECTIONAL VIEW DRAWING
3LSF 80-160

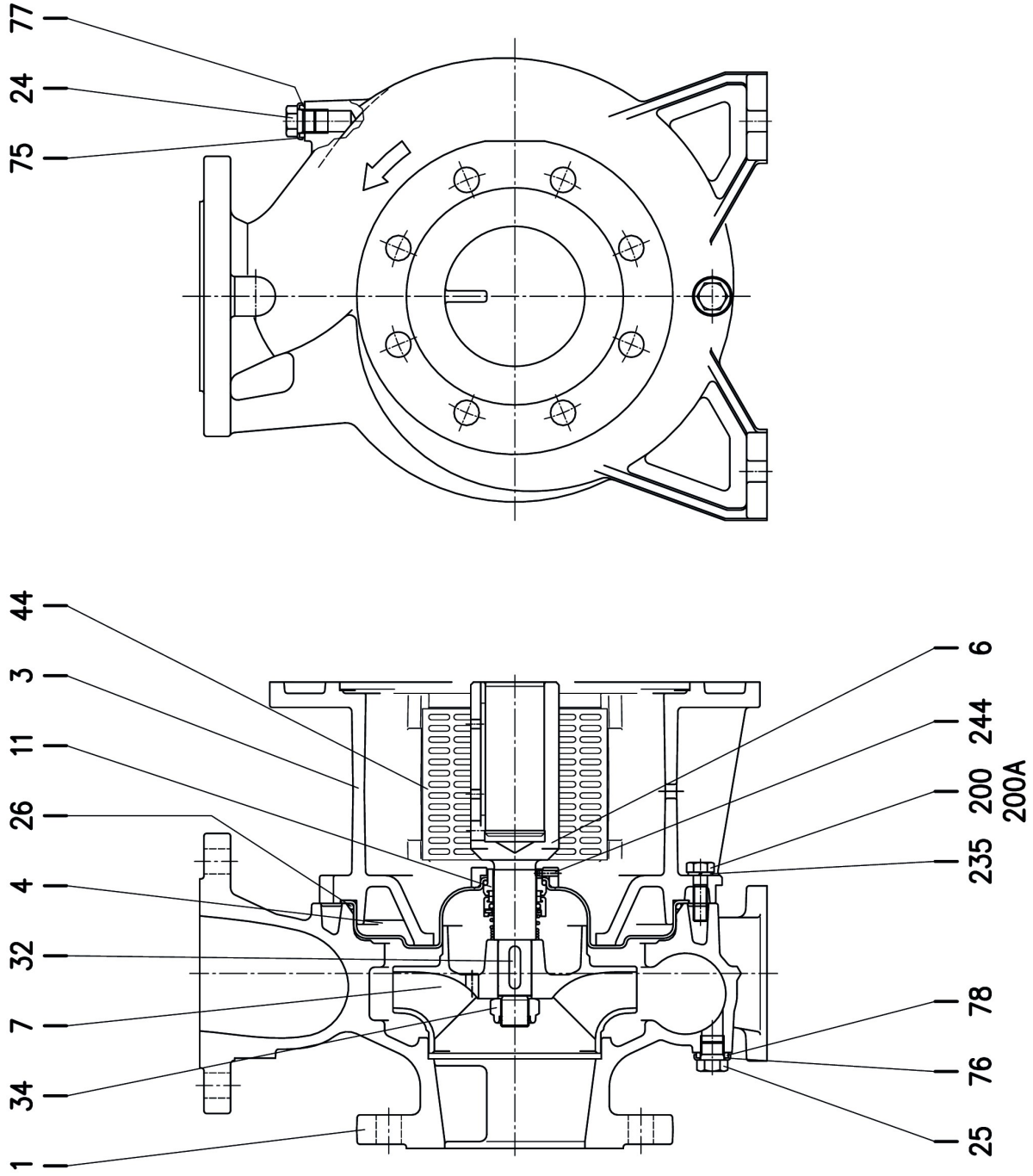

CONSTRUCTION

50Hz

Rev. J

SECTIONAL VIEW TABLE
3LSF 80-160

N°	PART NAME	MATERIAL	DIMENSIONS	STANDARD	Q.TY
1	Casing	EN 1.4401 (AISI 316)			1
3	Motor bracket	Cast iron EN-GJL-200-EN 1561			1
4	Casing cover	EN 1.4404 (AISI 316L)			1
6	Coupling	EN 1.4404 (AISI 316L)	See table p. 318		1
7	Impeller	EN 1.4401 (AISI 316)			1
11	Mechanical seal	SiC/SiC/FPM	See p. 313-317		1
24	Plug	EN 1.4404 (AISI 316L)	G3/8	EPE DRAWING	1
25	Plug	EN 1.4404 (AISI 316L)	G3/8	EPE DRAWING	1
26	"O" ring	FPM [2]	227.96x5.34	OR 6895	1
32	Key	EN 1.4401 (AISI 316)	8x7x30	UNI 6604	1
34	Impeller nut	EN 1.4404 (AISI 316L)	M20x1.5	UNI 7474	1
44	Protection	EN 1.4301 (AISI 304)		EPE DRAWING	2
75	Washer (plug)	EN 1.4404 (AISI 316L)			1
76	Washer (plug)				1
77	O-ring (plug)	FPM [2]			1
78	O-ring (plug)				1
200	Screw	Stainless steel A2-70 class ISO 3506/1	M 10x35	UNI 5739	10
200A	Screw		M 10x30		2
235	Washer	EN 1.4301(AISI 304)	10.5	UNI 8842	12
244	Pin [1]	EN 1.4301(AISI 304)	4x15		1

Counterflange kit on request see p. 319-320

[1] Not for H and E option
[2] FPM for H-HW-HSW version
EPDM for E version, Q1Q1EGG, Q1U3EGG, U3CEGG, Q1AEGG

CONSTRUCTION

50Hz

Rev. J

SECTIONAL VIEW DRAWING
3LSF4 65-250, 80

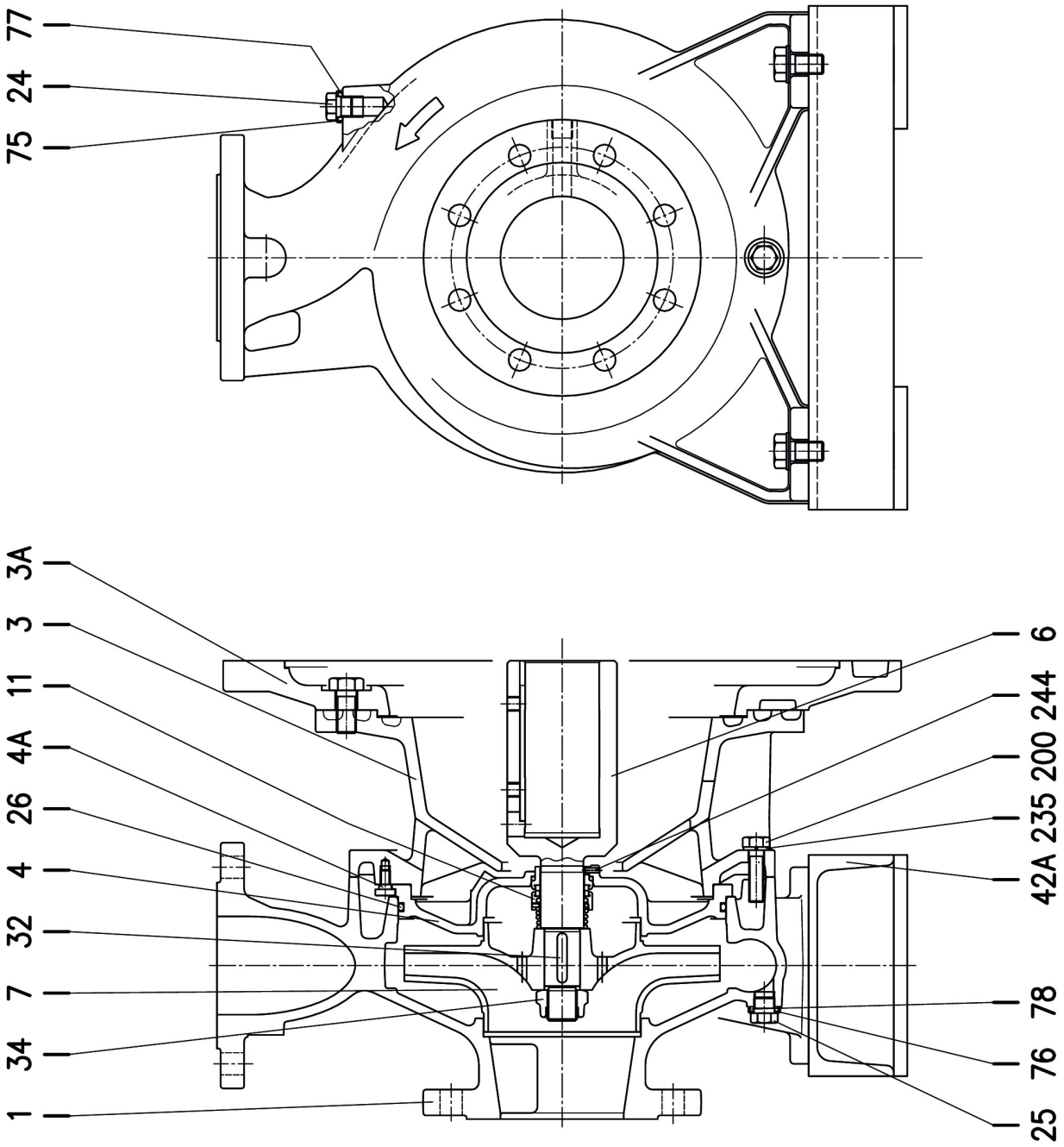

CONSTRUCTION

50Hz

Rev. J

SECTIONAL VIEW TABLE
3LSF4 65-250, 80

N°	PART NAME			MATERIAL	DIMENSIONS	STANDARD	Q.TY
1	Casing			EN 1.4401 (AISI 316)			1
3	Motor bracket			Cast iron EN-GJL-200-EN 1561			1
3A	Adapter ring			Cast iron EN-GJL-200-EN 1561			[1]
4	Casing cover			EN 1.4401 (AISI 316)			1
4A	Screw for casing cover			EN 1.4301(AISI 304)			2
6	Coupling	65-250	d=24 mm	EN 1.4462 (Duplex stainless steel)			1
		80-200	d=24 mm	EN 1.4404 (AISI 316L) for 22 kW			
				EN 1.4462 (Duplex stainless steel) for 30-37 kW			
		80-250	d=29 mm	EN 1.4462 (Duplex stainless steel)			
7	Impeller			EN 1.4401 (AISI 316)			1
11	Mechanical seal			SiC/SiC/FPM	See p. 313-317		1
24	Plug			EN 1.4404 (AISI 316L)	G3/8	EPE DRAWING	1
25	Plug			EN 1.4404 (AISI 316L)	G3/8	EPE DRAWING	1
26	"O" ring			FPM [4]	253.36x5.34	OR 6995	1
32	Key	65-250	d=24 mm	EN 1.4401 (AISI 316)	8 x7x 30	UNI 6604	1
		80-200					1
		80-250	d=29 mm		8x7x40		1
34	impeller nut	65-250	d=24 mm	EN 1.4404 (AISI 316L)	M20x1.5	UNI 7474	1
		80-200					1
		80-250	d=29 mm		M24x2		1
042A	Foot for pump			Aluminium/zincked steel (only for 80-250/55)			[2]
75	Washer (plug)			EN 1.4404 (AISI 316L)			1
76	Washer (plug)						1
77	O-ring (plug)			FPM [4]			1
78	O-ring (plug)						1
200	Screw			Stainless steel A2-70 class ISO 3506/1	M 12x45	UNI 5739	10
235	Washer			EN 1.4301(AISI 304)	13	UNI 8842	10
244	Pin [3]			EN 1.4301(AISI 304)	4x12		1

Counterflange kit on request, see table p. 319-320

[1] Only for 65-250/37, 80-200/37, 80-250/37, 80-250/45 and 80-250/55
[2] Q.TY=2 for 80-200/30 , 80-200/37 , 80-250/45
Q.TY=1 for 80-250/55
[3] Not for H and E version.
[4] FPM for H-HS-HW-HSW version
EPDM for E version 65-250 and 80-200: Q1Q1EGG, Q1U3EGG, U3CEGG, Q1AEGG
EPDM for ES only for 80-250 version

CONSTRUCTION

50Hz

Rev. J

SECTIONAL VIEW DRAWING
3(.)PF 32, 40, 50, 65

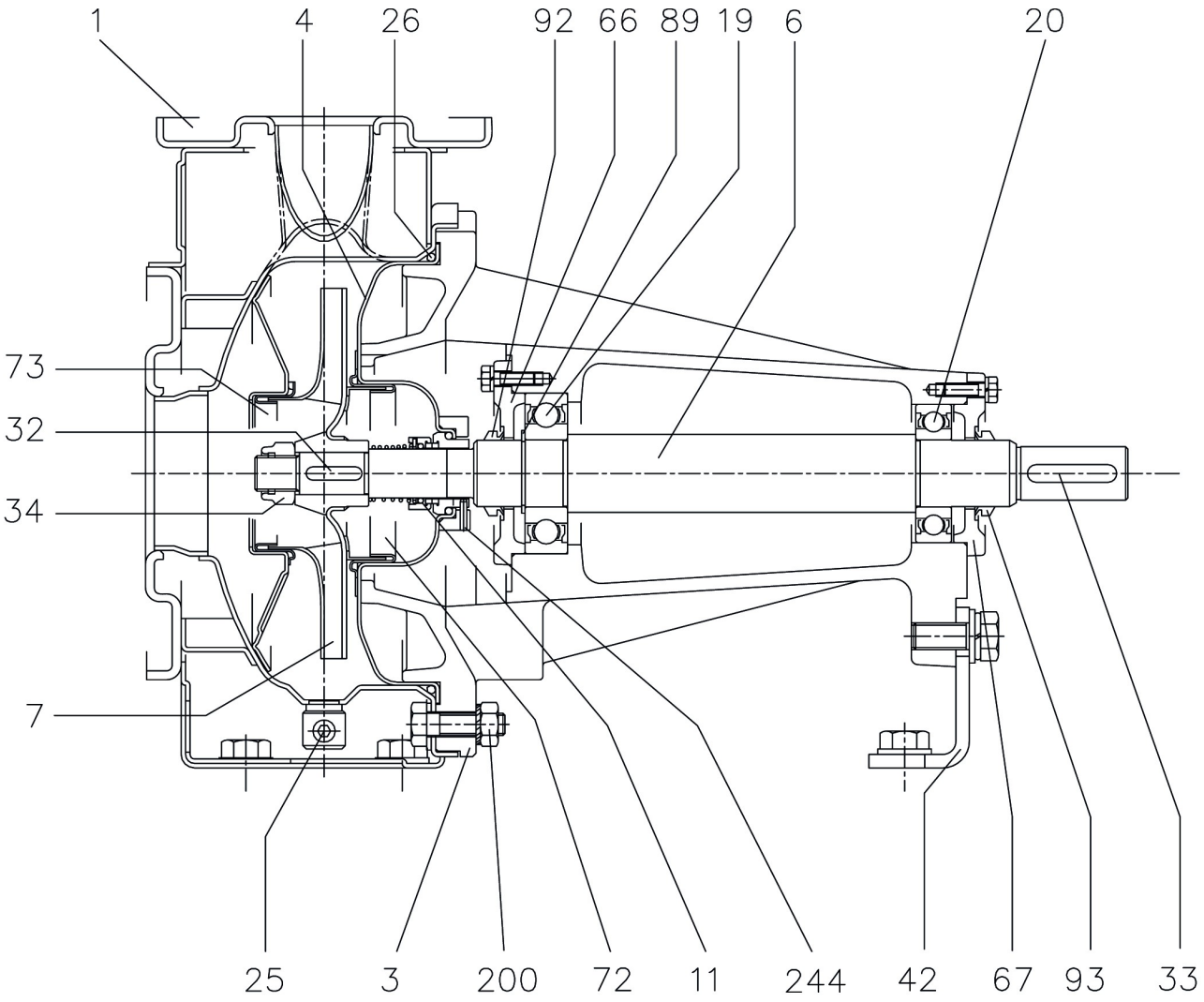

CONSTRUCTION

50Hz

Rev. J

SECTIONAL VIEW TABLE
3(.)PF 32, 40, 50, 65

N°	PART NAME		MATERIAL 3P	MATERIAL 3LP	DIMENSIONS	STANDARD	Q.TY
1	Casing		EN 1.4301 (AISI 304)	EN 1.4404 (AISI 316L)			1
3	Support		Cast iron EN-G JL-200-EN 1561				1
4	Casing cover		EN 1.4301 (AISI 304)	EN 1.4404 (AISI 316L)			1
6	Shaft - Part in contact with liquid		EN 1.4301 (AISI 304)	EN 1.4404 (AISI 316L)			1
7	Impeller	32,40,50	EN 1.4301 (AISI 304)	EN 1.4404 (AISI 316L)			1
		65-125/160/200	EN 1.440 1 (AISI 316)				
11	Mechanical seal		Carbon/Ceramic/NBR	SiC/SiC/FPM	See p. 313-317		1
19	Bearing		-		See table p. 312		1
20	Bearing		-		See table p. 312		1
25	Draing plug		EN 1.4401 (AI SI 316) / PTFE		R 1/8" L=8	DIN 906	1
26	O ring	32-125, 40-125	NBR [4]	FPM	158.11x5.34	OR 6625	1
		32-160, 40-160, 50-125, 65-125			183.52x5.34	OR 6720	
		32-200, 40-200, 50-160 , 50-200, 65-160, 65-200			227.96x5.34	OR 6895	
32	Key	Up to 11 Kw	EN 1.4301 (AISI 304)	EN 1.4401 (AISI 316)	6 x6x 25	UNI 6604	1
		15 kW and above			8 x7x 30		
33	Key		C 40		8x7x40	UNI 6604	1
34	Impeller nut	Up to 11kW	EN 1.4301 (AISI 304)	EN 1.4404 (AISI 316L)	M16x1.5	UNI 7474	1
		50-200/15			M18x1.5		
		15 kW and above			M20x1.5		
42	Pump support		Fe 37 Zi nc-coated			EBARA DRAWING	1
66	Impeller side bearing cover		Cast iron EN-G JL-200-EN 1561				1
67	Motor side bearing cover		Cast iron EN-G JL-200-EN 1561				1
72	Casing ring [1]		EN 1.4301 (AISI 304)	EN 1.4404 (AISI 316L)			1
73	Casing ring (not for 65 version)		EN 1.4301 (AISI 304)	EN 1.4404 (AISI 316L)			1
89	Snap ring		Carbon tool steels TC 80		Ø 40	UNI 7435	1
92	"V" ring		-		VS - 0030		1
93	"V" ring		-		VS - 0030		1
200	Screw	32-125, 40-125	Stainless steel A2 70 class ISO 3506/ 1		M 8x30	UNI 5739	8
		40-160, 40-200, 50-125, 50-160, 50-200, 65-125, 65-160, 65-200			M 10x35	UNI 5739	[2]
244	Pin [3]		-	EN 1.4301 (AISI 304)	4x15		1

Counterflange kit on request see p. 319-320

[1]For version 32-200, 40-200, 50-160, 50-200
[2] Q.TY=10 for 32-160, 40-160, 50-125, 65-125
Q.TY=12 for 32-200, 40-200, 50-160, 50-200, 65-160, 65-200
[3] Only for 65-160/15 and 65-200 -200
[4] FPM for H-HS-HW-HSW version
EPDM for E version, Q1AEGG, Q1U3EGG, U3CEGG, Q1Q1EGG, U3U3EGG
U3CU3EGG not available for models 65-160/15 and 65-200

SECTIONAL VIEW DRAWING
3LPF 80-160

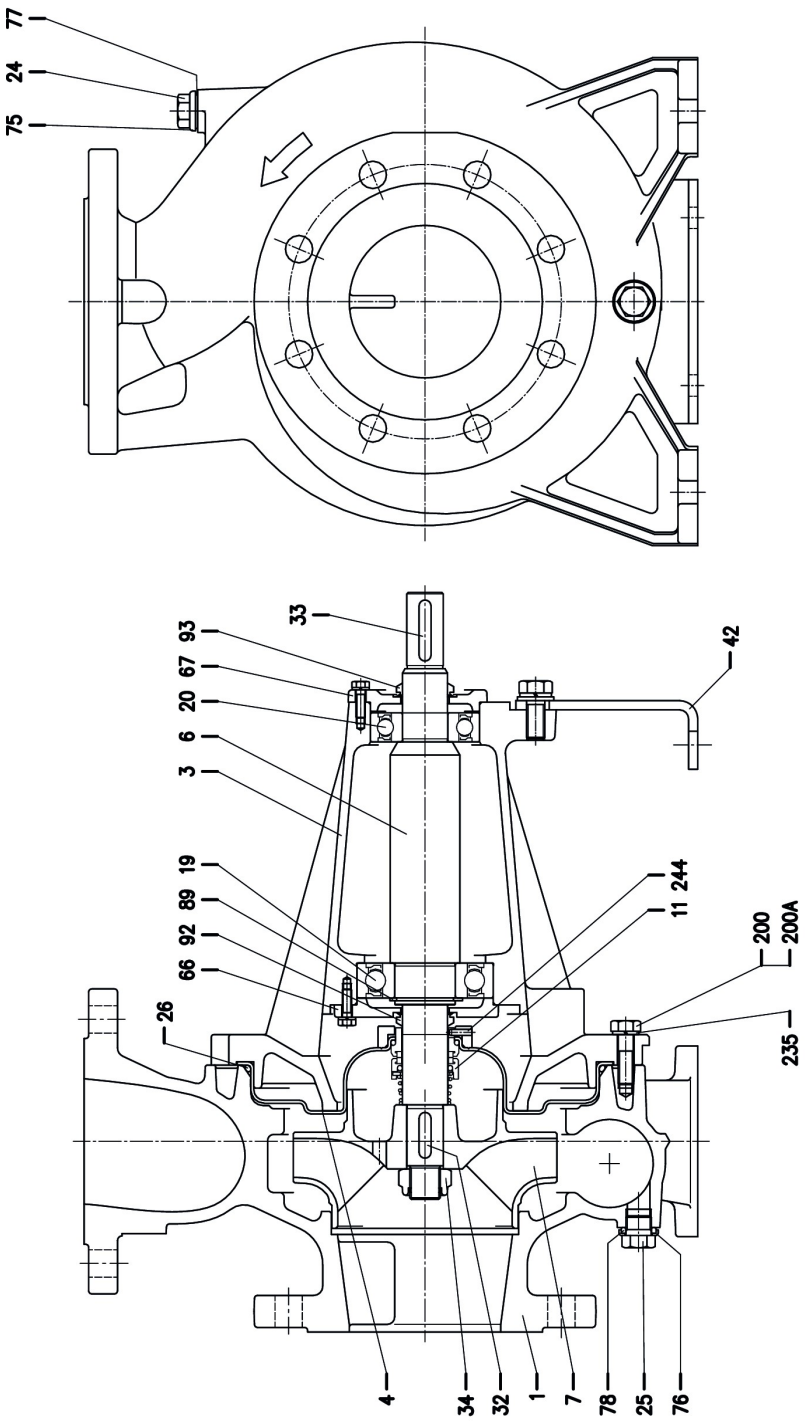

CONSTRUCTION

50Hz

Rev. J

SECTIONAL VIEW TABLE
3LPF 80-160

N°	PART NAME	MATERIAL	DIMENSIONS	STANDARD	Q.TY
1	Casing	EN 1.4401 (AISI 316)			1
3	Support	Cast iron EN-GJL-200-EN 1561			1
4	Casing cover	EN 1.4404 (AISI 316L)			1
6	Shaft	EN 1.4404 (AISI316L)-Part in contact with liquid			1
7	Impeller	EN 1.4401 (AISI 316)			1
11	Mechanical seal	SiC/SiC/FPM	See p. 313-317		1
19	Bearing	-	See table p. 312		1
20	Bearing	-	See table p. 312		1
24	Plug	EN 1.4404 (AISI 316L)	G3/8	EPE DRAWING	1
25	Plug	EN 1.4404 (AISI 316L)	G3/8	EPE DRAWING	1
26	"O" ring	FPM [2]	227.96x5.34	OR 6895	1
32	Key	EN 1.4401 (AISI 316)	8x7x30	UNI 6604	1
33	Key	C 40	8x7x40		1
34	Impeller nut	EN 1.4404 (AISI 316L)	M20x1.5	UNI 7474	1
42	Pump support	Zincked steel		EPE DRAWING	1
66	Impeller side bearing cover	Cast iron EN-GJL-200-EN 1561			1
67	Motor side bearing cover	Cast iron EN-GJL-200-EN 1561			1
75	Washer (plug)	EN 1.4404 (AISI 316L)			1
76	Washer (plug)				1
77	O-ring (plug)	FPM [2]			1
78	O-ring (plug)				1
89	Snap ring	Carbon tool steels TC 80	Ø 40	UNI 7435	1
92	"V" ring	-	VS-0030		1
93	"V" ring				1
200	Screw	Stainless steel A2 70 class ISO 3506/1	M 10x35	UNI 5739	10
200A	Screw		M 10x30		2
235	Washer	EN 1.4301(AISI 304)	10.5	UNI 8842	12
244	Pin [1]	EN 1.4301(AISI 304)	4x15		1

Counterflange kit on request, see table p. 319-320

[1] Not for H and E option.
[2] FPM for H-HW-HSW version
EPDM for E version, Q1Q1EGG, Q1U3EGG, U3CEGG, Q1AEGG

CONSTRUCTION

50Hz

Rev. J

SECTIONAL VIEW DRAWING
3LPF 65-250, 80

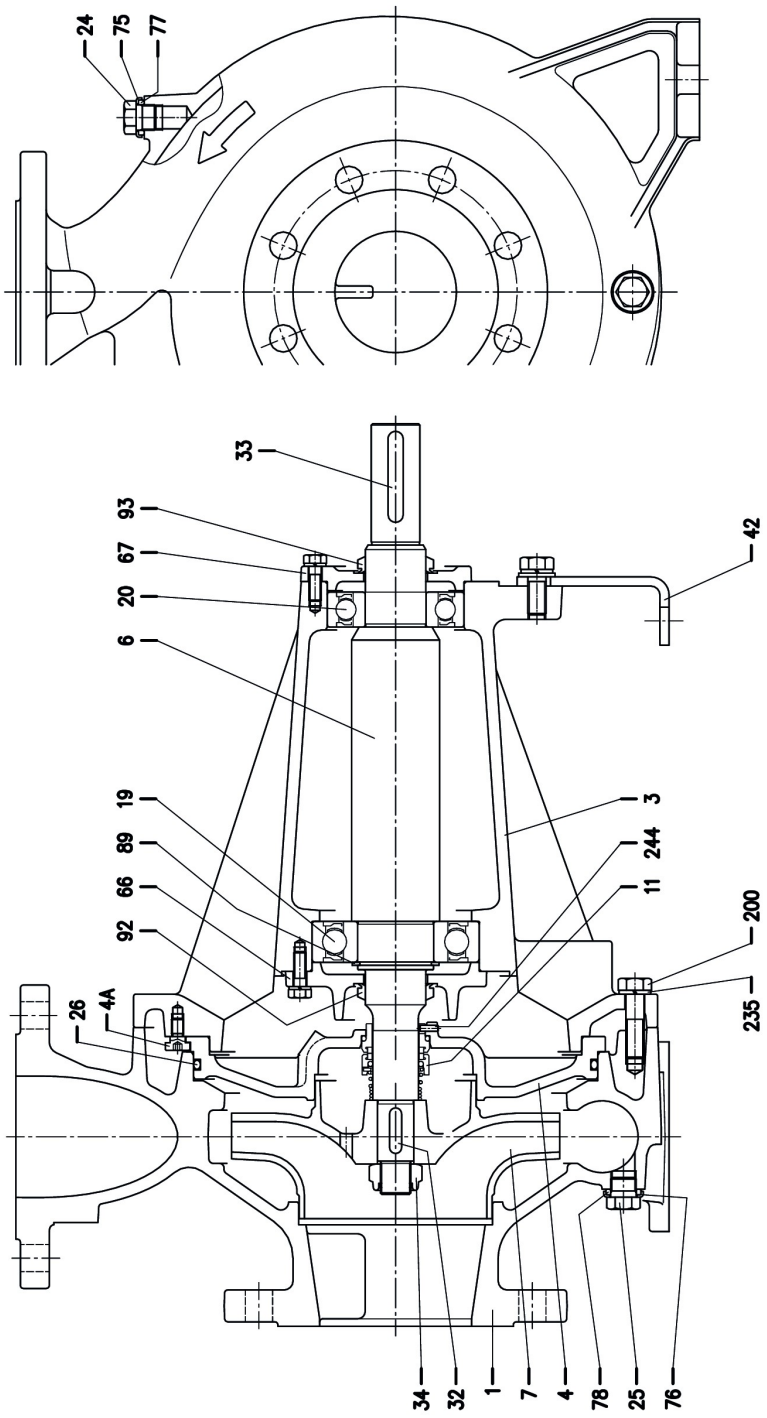

CONSTRUCTION

50Hz

Rev. J

SECTIONAL VIEW TABLE
3LPF 65-250, 80

N°	PART NAME			MATERIAL	DIMENSIONS	STANDARD	Q.TY
1	Casing			EN 1.4401 (AISI 316)			1
3	Support			Cast iron EN-GJL-200-EN 1561			1
4	Casing cover			EN 1.4401 (AISI 316)			1
4A	Screw for casing cover			EN 1.4301 (AISI 304)			2
6	Shaft			EN 1.4462 (Duplex stainless steel) Part in contact with liquid			1
7	Impeller			EN 1.4401 (AISI 316)			1
11	Mechanical seal			SiC/SiC/FPM	See p. 313-317		1
19	Bearing			-	See table p. 312		1
20	Bearing			-	See table p. 312		1
24	Plug			EN 1.4404 (AISI 316L)	G3/8		1
25	Plug			EN 1.4404 (AISI 316L)	G3/8		1
26	"O" ring			FPM [2]	253.36x5.34	OR 6995	1
32	Key	65-250	d=24 mm	EN 1.4401 (AISI 316)	8 x7x 30	UNI 6604	1
		80-200					1
		80-250	d=29 mm		8x7x40		1
33	Key			C 40	10x8x60	UNI 6604	1
34	impeller nut	65-250	d=24 mm	EN 1.4404 (AISI 316L)	M20x1.5	UNI 7474	1
		80-200					1
		80-250	d=29 mm		M24x2		1
42	Pump support			Zincked steel			1
66	Impeller side bearing cover			Cast iron EN-GJL-200-EN 1561			1
67	Motor side bearing cover			Cast iron EN-GJL-200-EN 1561			1
75	Washer (plug)			EN 1.4404 (AISI 316L)			1
76	Washer (plug)						1
77	O-ring (plug)			FPM [2]			1
78	O-ring (plug)						1
89	Snap ring			Carbon tool steels TC 80	Ø 50	UNI 7435	1
92	"V" ring			-	VS-0040		1
93	"V" ring						1
200	Screw			Stainless steel A2 70 class ISO 3506/1	M 12x45	UNI 5739	10
235	Washer			EN 1.4301 (AISI 304)	13	UNI 8842	10
244	Pin		[1]	EN 1.4301 (AISI 304)	4x12	UNI 6873	1

Counterflange kit on request, see table p. 319-320

[1] Not for H and E option.
[2] FPM for H-HW-HSW version
EPDM for E version, 65-250 and 80-200: Q1Q1EGG, Q1U3EGG, U3CEGG, Q1AEGG
EPDM for ES only for 80-250 version

3(.)PF BALL BEARING

Type pumps 50 Hz	Ball bearing	
	Pump side	Motor side
32-125	6306-2RS1 C3	6206-2RS1 C3
32-160/R		
32-160		
32-200/R	6308-2RS1 C3	6306-2RS1 C3
32-200		
32-200/L		
40-125/R	6306-2RS1 C3	6206-2RS1 C3
40-125		
40-160/R		
40-160		
40-200/R	6308-2RS1 C3	6306-2RS1 C3
40-200		
40-200/L		
50-125/S	6306-2RS1 C3	6206-2RS1 C3
50-125/R		
50-125		
50-160/R	6308-2RS1 C3	6306-2RS1 C3
50-160		
50-200/R		
50-200		
50-200/L		
65-125/R	6306-2RS1 C3	6206-2RS1 C3
65-125		
65-125/L		
65-160/S	6308-2RS1 C3	6306-2RS1 C3
65-160/R		
65-160		
65-160/L		
65-200/R		
65-200		
65-200/L		
65-250	6310-2RS1 C3	6308-2RS1 C3
65-250/L		
80-160/S	6308-2RS1 C3	6306-2RS1 C3
80-160/R		
80-160		
80-160/L		
80-200/R	6310-2RS1 C3	6308-2RS1 C3
80-200		
80-200/L		
80-250/R		
80-250		
80-250/L		

CONSTRUCTION

50Hz

Rev. J

MECHANICAL SEAL (Standard, H, E and Special version)

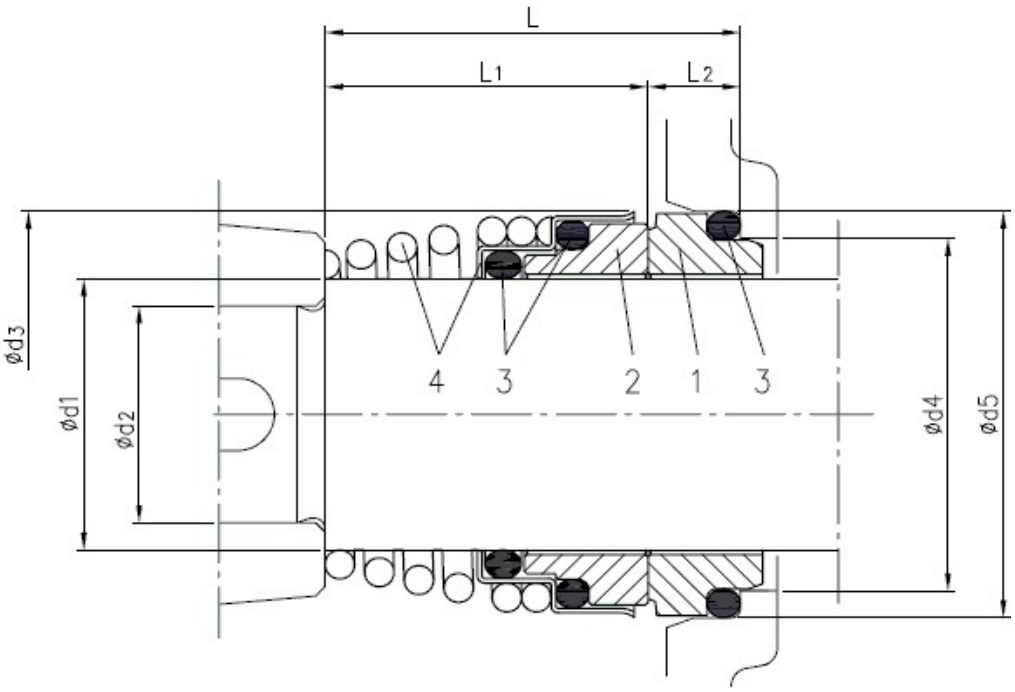

Version	Pump type	Dimensions								Material			
		d1	d2	d3	d4	d5	L	L1	L2	**1** Stationary seal ring	**2** Rotary seal ring	**3** Rubber	**4** Frame + spring
Standard	32-125/160/200 40-125/160/200 50-125/160/200 65-125 65-160/7.5-9.2-11	22	19	38	31	37	37.5	27.5	10	Carbon	Ceramic	NBR	EN 1.4401 (AISI 316)
	65-160/15 65-200	30	24	46	39	45	42.5	32.5	10				
H	32-125/160/200 40-125/160/200 50-125/160/200 65-125 65-160/7.5-9.2-11	22	19	38	31	37	37.5	27.5	10	Carbon	Ceramic	FPM	EN 1.4401 (AISI 316)
	65-160/15 65-200/250 80-160/200	30	24	46	39	45	42.5	32.5	10				
	80-250	35	29	50	44	50	42.5	32.5	10				
E	32-125/160/200 40-125/160/200 50-125/160/200 65-125 65-160/7.5-9.2-11	22	19	38	31	37	37.5	27.5	10	Carbon	Ceramin	EPDM	EN 1.4401 (AISI 316)
	65-160/15 65-200/250 80-160/200	30	24	46	39	45	42.5	32.5	10				
Q1AEGG*	65-160/15 65-200/250 80-160/200	30	24	46	39	45	42.5	32.5	10	Silicon Carbide	Metallised Carbon	EPDM	EN 1.4401 (AISI 316)

* The drawing is only indicative

CONSTRUCTION

50Hz

Rev. J

MECHANICAL SEAL (L version Ø 22)

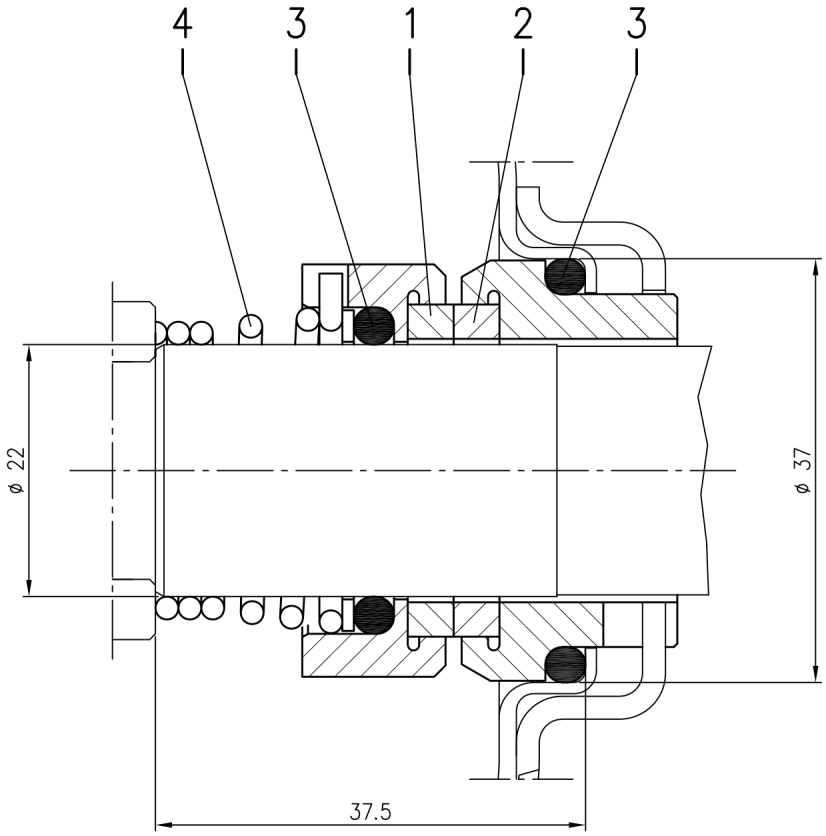

Version	Pump type	Material			
		1 Stationary seal ring	2 Rotary seal ring	3 Rubber	4 Frame + spring
L ø22	32-125/160/200 40-125/160/200 50-125/160/200 65-125 65-160/7.5-9.2-11	SiC	SiC	FPM	EN 1.4571 (AISI 316Ti)

CONSTRUCTION

50Hz

Rev. J

MECHANICAL SEAL (L version Ø 30-35)

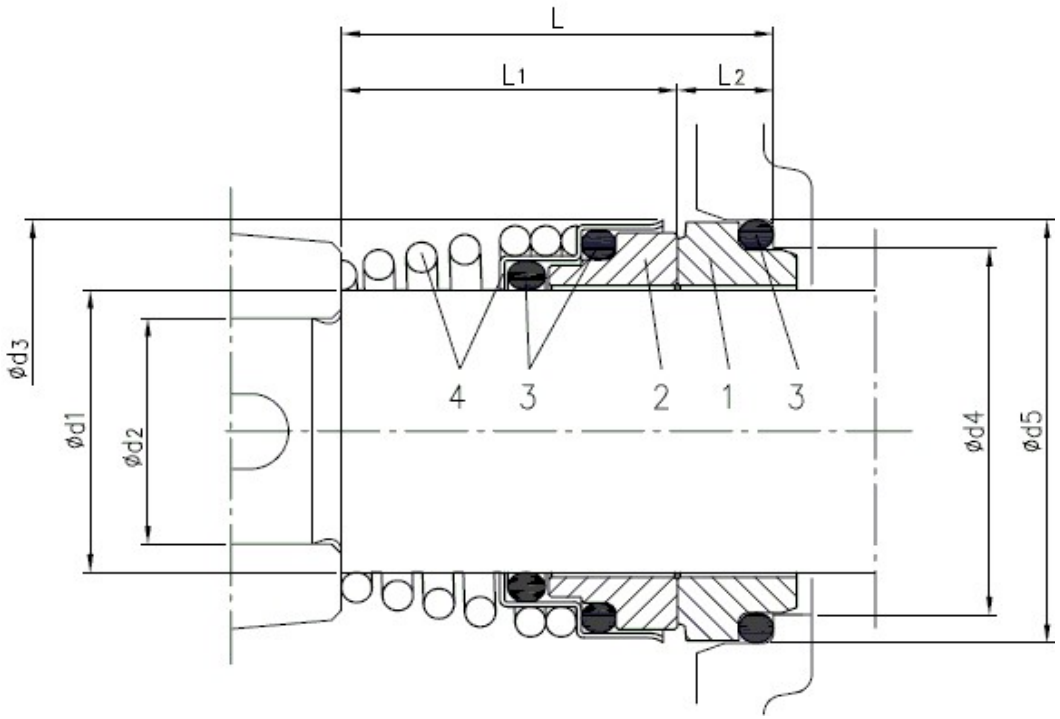

Version	Pump type	Dimensions								Material			
		d1	d2	d3	d4	d5	L	L1	L2	**1** Stationary seal ring	**2** Rotary seal ring	**3** Rubber	**4** Frame + spring
L ø30	65-160/15 65-200/250 80-160/200	30	24	44	39	45	42.5	31	11.5	SiC	SiC	FPM	EN 1.4571 (AISI 316Ti)
L ø35	80-250	35	29	49	44	50	42.5	31	11.5	SiC	SiC	FPM	EN 1.4571 (AISI 316Ti)

CONSTRUCTION

50Hz

Rev. J

MECHANICAL SEAL (HS version and Special version Ø22)

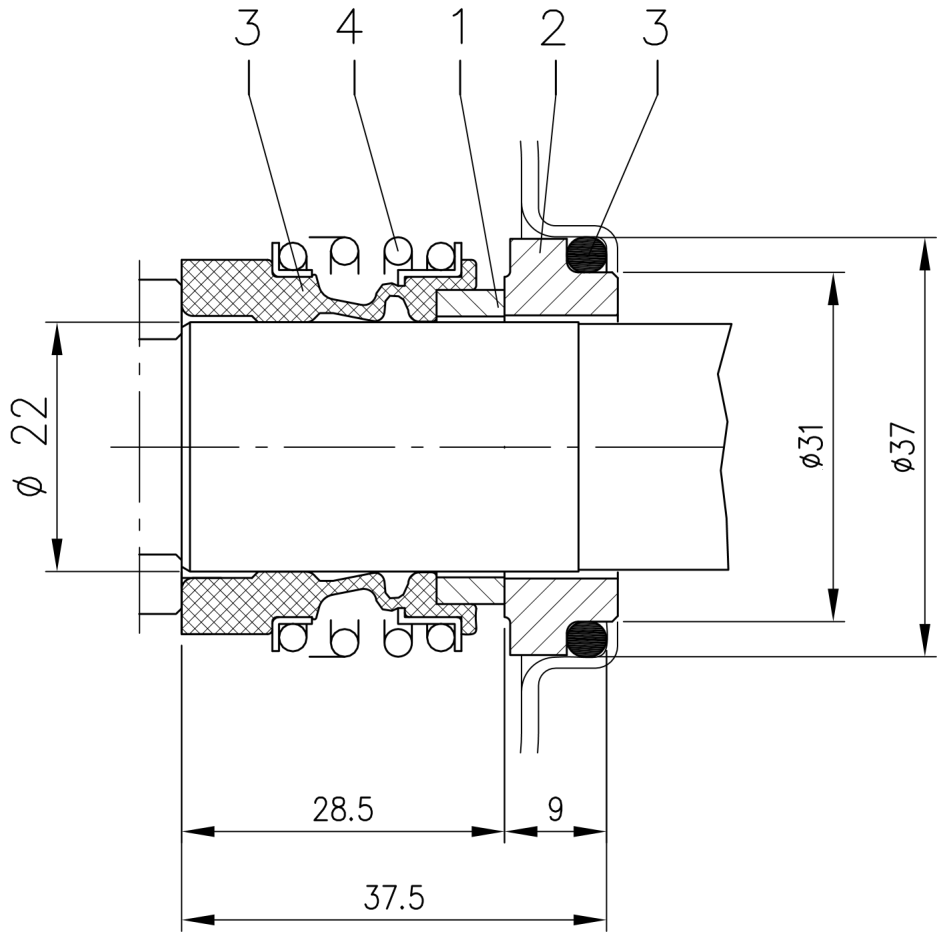

Version	Pump type	Material 1 Stationary seal ring	2 Rotary seal ring	3 Rubber	4 Frame + spring
HS ø22	32-125/160/200 40-125/160/200 50-125/160/200 65-125 65-160/7.5-9.2-11	SiC	SiC	FPM	EN 1.4571 (AISI 316Ti)
Q1AEGG*	32-125/160/200 40-125/160/200 50-125/160/200 65-125 65-160/7.5-9.2-11	Silicon Carbide	Metallised Carbon	EPDM	EN 1.4401 (AISI 316)

* The drawing is only indicative

CONSTRUCTION

50Hz

Rev. J

MECHANICAL SEAL (HS Ø30, HW, HSW, ES and Special version)

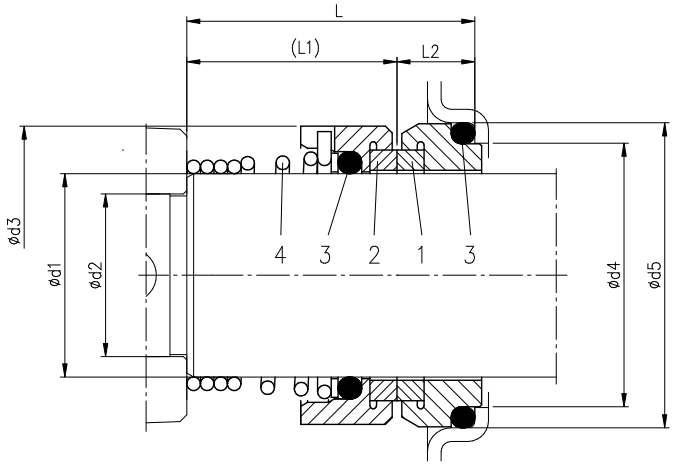

Version	Pump type	Dimensions								Material			
		d1	d2	d3	d4	d5	L	L1	L2	1 Stationary seal ring	2 Rotary seal ring	3 Rubber	4 Frame + Spring
HS Ø30	65-160/15 65-200	30	24	46	39	45	42.5	31	11.5	SiC	SiC	FPM	EN 1.4571 (AISI 316Ti)
HW	32-125/160/200 40-125/160/200 50-125/160/200 65-125 65-160/7.5-9.2-11	22	19	38	31	37	37.5	27.5	10	Tungsten Carbide	Tungsten Carbide	FPM	EN 1.4401 (AISI 316)
	65-160/15 65-200/250 80-160/200	30	24	46	39	45	42.5	32.5	10				
	80-250	35	29	50	44	50	42.5	32.5	10				
HSW	32-125/160/200 40-125/160/200 50-125/160/200 65-125 65-160/7.5-9.2-11	22	19	38	31	37	37.5	27.5	10	Tungsten Carbide	SiC	FPM	EN 1.4401 (AISI 316)
	65-160/15 65-200/250 80-160/200	30	24	46	39	45	42.5	32.5	10				
	80-250	35	29	50	44	50	42.5	32.5	10				
ES	80-250	35	29	50	44	50	42.5	32.5	10	Carbon	SiC	EPDM	EN 1.4401 (AISI 316)
U3U3EGG*	32-125/160/200 40-125/160/200 50-125/160/200 65-125 65-160/7.5-9.2-11	22	19	38	31	37	37.5	27.5	10	Tungsten Carbide	Tungsten Carbide	EPDM	EN 1.4401 (AISI 316)
Q1Q1EGG*	32-125/160/200 40-125/160/200 50-125/160/200 65-125 65-160/7.5-9.2-11	22	19	38	31	37	37.5	27.5	10	Silicon Carbide	Silicon Carbide	EPDM	EN 1.4401 (AISI 316)
	65-160/15 65-200/250 80-160/200	30	24	46	39	45	42.5	32.5	10				
Q1U3EGG*	32-125/160/200 40-125/160/200 50-125/160/200 65-125 65-160/7.5-9.2-11	22	19	38	31	37	37.5	27.5	10	Silicon Carbide	Tungsten Carbide	EPDM	EN 1.4401 (AISI 316)
	65-160/15 65-200/250 80-160/200	30	24	46	39	45	42.5	32.5	10				
U3CEGG*	32-125/160/200 40-125/160/200 50-125/160/200 65-125 65-160/7.5-9.2-11	22	19	38	31	37	37.5	27.5	10	Tungsten Carbide	Silicon Carbide	EPDM	EN 1.4401 (AISI 316)
	65-160/15 65-200/250 80-160/200	30	24	46	39	45	42.5	32.5	10				

* The drawing is only indicative

CONSTRUCTION

50Hz

Rev. J

COUPLING

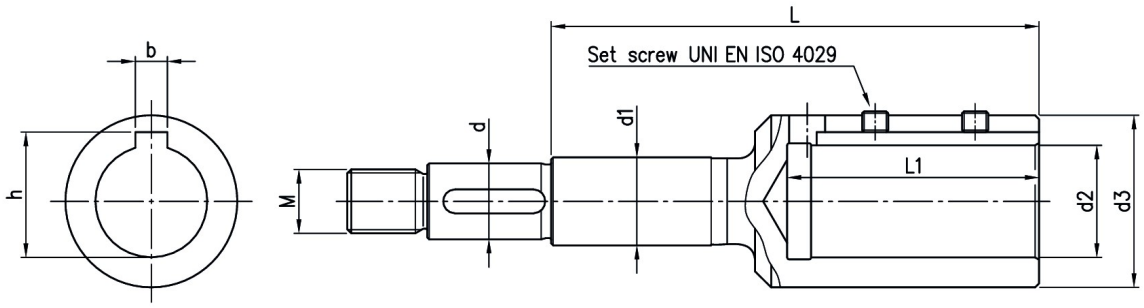

Type pumps	kW	HP	Motor Size	Dimensions mm									
				d	d1	d2	d3	M	L	L1	b	h	Set screw
3(.)SF 32-125/1.1	1.1	1.5	80	19	22	19	33	M16x1.5	98	43	6	21.8	M6x6
3(.)SF 32-160/1.5	1.5	2	90	19	22	24	39	M16x1.5	110	53	8	27.3	M8x8
3(.)SF 32-160/2.2	2.2	3	90	19	22	24	39	M16x1.5	110	53	8	27.3	M8x8
3(.)SF 32-200/3.0	3	4	100	19	22	28	43	M16x1.5	122	63	8	31.3	M8x8
3(.)SF 32-200/4.0	4	5.5	112	19	22	28	43	M16x1.5	122	63	8	31.3	M8x8
3(.)SF 32-200/5.5	5.5	7.5	132	19	22	38	58	M16x1.5	145	84	10	41.3	M8x8
3(.)SF 32-200/7.5	7.5	10	132	19	22	38	58	M16x1.5	145	84	10	41.3	M8x8
3(.)SF 40-125/1.5	1.5	2	90	19	22	24	39	M16x1.5	110	53	8	27.3	M8x8
3(.)SF 40-125/2.2	2.2	3	90	19	22	24	39	M16x1.5	110	53	8	27.3	M8x8
3(.)SF 40-160/3.0	3	4	100	19	22	28	43	M16x1.5	122	63	8	31.3	M8x8
3(.)SF 40-160/4.0	4	5.5	112	19	22	28	43	M16x1.5	122	63	8	31.3	M8x8
3(.)SF 40-200/5.5	5.5	7.5	132	19	22	38	58	M16x1.5	145	84	10	41.3	M8x8
3(.)SF 40-200/7.5	7.5	10	132	19	22	38	58	M16x1.5	145	84	10	41.3	M8x8
3(.)SF 40-200/11	11	15	160	19	22	42	63	M16x1.5	178	114	12	45.3	M8x8
3(.)SF 50-125/2.2	2.2	3	90	19	22	24	39	M16x1.5	110	53	8	27.3	M8x8
3(.)SF 50-125/3.0	3	4	100	19	22	28	43	M16x1.5	122	63	8	31.3	M8x8
3(.)SF 50-125/4.0	4	5.5	112	19	22	28	43	M16x1.5	122	63	8	31.3	M8x8
3(.)SF 50-160/5.5	5.5	7.5	132	19	22	38	58	M16x1.5	145	84	10	41.3	M8x8
3(.)SF 50-160/7.5	7.5	10	132	19	22	38	58	M16x1.5	145	84	10	41.3	M8x8
3(.)SF 50-200/9.2	9.2	12.5	132	19	22	38	58	M16x1.5	145	84	10	41.3	M8x8
3(.)SF 50-200/11	11	15	160	19	22	42	63	M16x1.5	178	114	12	45.3	M8x8
3(.)SF 50-200/15	15	20	160	22	22	42	63	M18x1.5	209	114	12	45.3	M8x8
3(.)SF 65-125/4.0	4	5.5	112	19	22	28	43	M16x1.5	122	63	8	31.3	M8x8
3(.)SF 65-125/5.5	5.5	7.5	132	19	22	38	58	M16x1.5	145	84	10	41.3	M8x8
3(.)SF 65-125/7.5	7.5	10	132	19	22	38	58	M16x1.5	145	84	10	41.3	M8x8
3(.)SF 65-160/7.5	7.5	10	132	19	22	38	58	M16x1.5	145	84	10	41.3	M8x8
3(.)SF 65-160/9.2	9.2	12.5	132	19	22	38	58	M16x1.5	145	84	10	41.3	M8x8
3(.)SF 65-160/11	11	15	160	19	22	42	63	M16x1.5	178	114	12	45.3	M8x8
3(.)SF 65-160/15	15	20	160	24	30	42	63	M20x1.5	184	114	12	45.3	M8x8
3(.)SF 65-200/15	15	20	160	24	30	42	63	M20x1.5	184	114	12	45.3	M8x8
3(.)SF 65-200/18.5	18.5	25	160	24	30	42	63	M20x1.5	184	114	12	45.3	M8x8
3(.)SF 65-200/22	22	30	180	24	30	48	72	M20x1.5	184	114	14	51.8	M10x10
3(.)SF 65-250/30	30	40	200	24	30	55	85	M20x1.5	184	114	16	59.3	M12x12
3(.)SF 65-250/37	37	50	200	24	30	55	85	M20x1.5	184	114	16	59.3	M12x12
3(.)SF 80-160/11	11	15	160	24	30	42	63	M20x1.5	184	114	12	45.3	M8x8
3(.)SF 80-160/15R	15	20	160	24	30	42	63	M20x1.5	184	114	12	45.3	M8x8
3(.)SF 80-160/15	15	20	160	24	30	42	63	M20x1.5	184	114	12	45.3	M8x8
3(.)SF 80-160/18.5	18.5	25	160	24	30	42	63	M20x1.5	184	114	12	45.3	M8x8
3(.)SF 80-200/22	22	30	180	24	30	48	72	M20x1.5	184	114	14	51.8	M10x10
3(.)SF 80-200/30	30	40	200	24	30	55	85	M20x1.5	184	114	16	59.3	M12x12
3(.)SF 80-200/37	37	50	200	24	30	55	85	M20x1.5	184	114	16	59.3	M12x12
3(.)SF 80-250/37	37	50	200	29	35	55	85	M24x2	206	114	16	59.3	M12x12
3(.)SF 80-250/45	45	60	225	29	35	55	85	M24x2	206	114	16	59.3	M12x12
3(.)SF 80-250/55	55	75	250	29	35	60	89	M24x2	218	144	18	64.4	M12x12

CONSTRUCTION

50Hz

Rev. J

COUNTERFLANGE ZINCKED STEEL

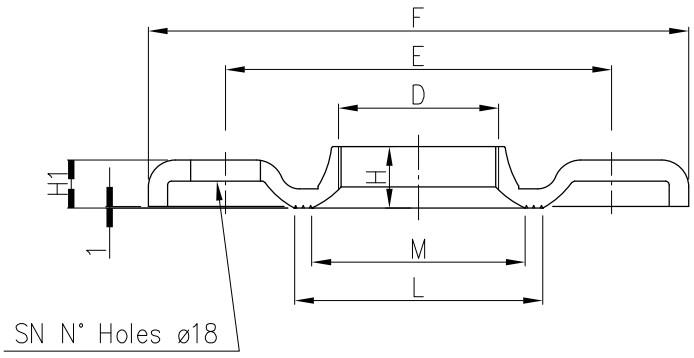

Counterflange									Screw	
DN	D	E	F	H	H1	L	M	SN	DIMENSIONS	MATERIAL
32	G 1 1/4	100	100	15	11.5	67	50	4	M16x55	Zn. Steel 8.8 strenght class ISO 898-1
40	G 1 1/2	110	110	17.5	11.5	72	58	4		
50	G2	125	125	19	15	89	70	4		
65	G 2 1/2	145	185	23	14	104	88	4		
80	G3	160	200	24	16	117.5	100	8	M16x60	
100	G4	180	220	29	16	144	125	8		

COUNTERFLANGE EN 1.4404 (AISI 316L)

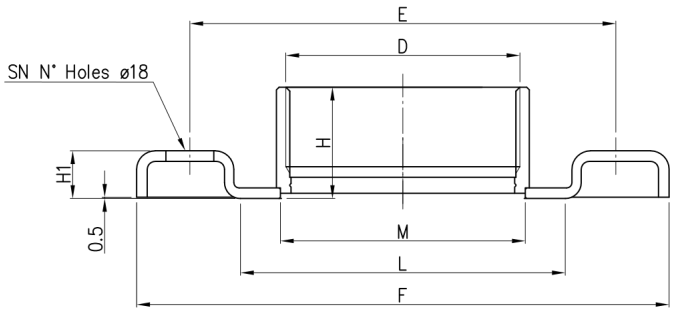

Counterflange									Screw	
DN	D	E	F	H	H1	L	M	SN	DIMENSIONS	MATERIAL
32	G 1 1/4	100	140	29.5	14	66	44	4	M16x55	A2-70 class ISO 3506-1
40	G 1 1/2	110	150	29.5	14	71	50.5			
50	G 2	125	165	34	16	83	63			
65	G 2 1/2	145	185	40	16	103	80			
80	G3	160	200	42	18	122	92	8	M16x60	

CONSTRUCTION

50Hz

Rev. J

COUNTERFLANGE EN 1.4404 (AISI 316L) DN100

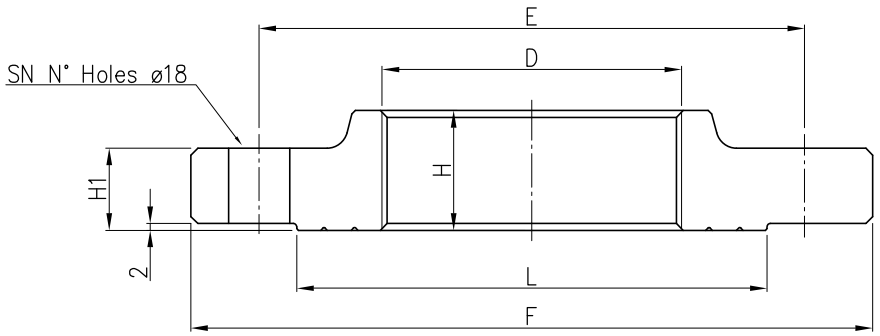

Counterflange								Screw	
DN	D	E	F	H	H1	L	SN	DIMENSIONS	MATERIAL
100	G4	180	220	35	20	150	8	M16x70	A2-70 class ISO 3506-1

GASKET

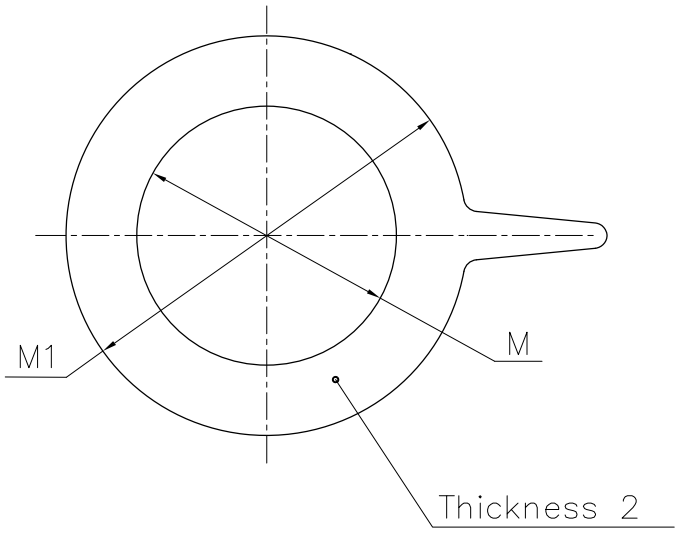

DN	M	M1
32	38	82
40	50	93
50	60	107
65	80	125
80	90	140
100	115	160

Material: EPDM for standard version
FPM for L version

DIMENSIONS

50Hz

Rev. J

PUMP 3(.)SF 32, 40, 50

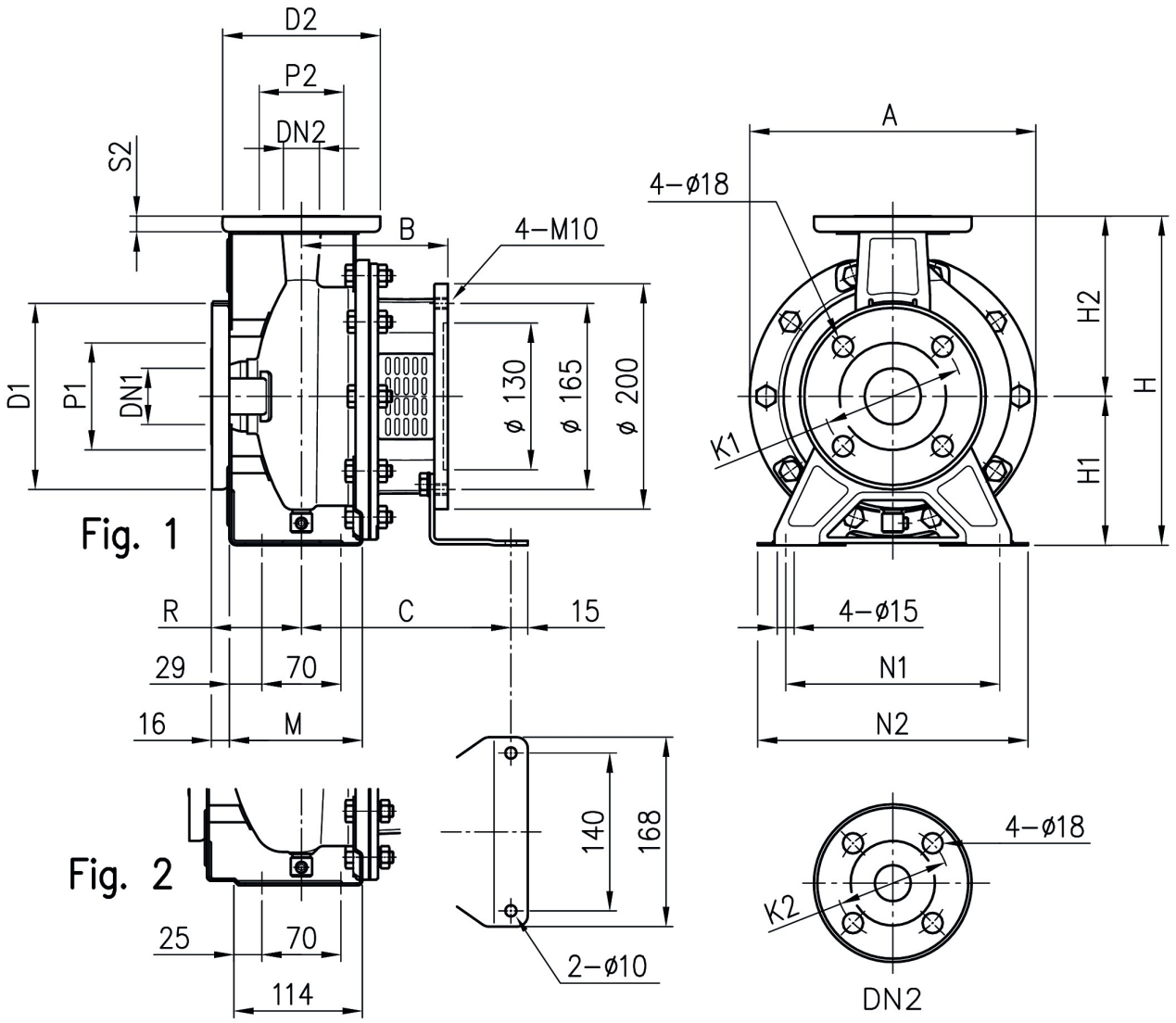

Pump type	Dimensions [mm]																				Weight [kgf]
	Fig.	DN1	P1	K1	D1	DN2	P2	K2	D2	S2	H	H1	H2	M	N1	N2	R	A	B	C	
32-125/1.1	1	50	95	125	165	32	75	100	140	14	252	112	140	114	140	190	80	213	118	174	13.1
32-160/1.5	1	50	95	125	165	32	75	100	140	14	292	132	160	118	190	240	80	254	130	186	17
32-160/2.2	1	50	95	125	165	32	75	100	140	14	292	132	160	118	190	240	80	254	130	186	17
40-125/1.5	1	65	115	145	185	40	80	110	150	14	252	112	140	114	160	210	80	213	130	186	14.4
40-125/2.2	1	65	115	145	185	40	80	110	150	14	252	112	140	114	160	210	80	213	130	186	14.5
50-125/2.2	2	65	115	145	185	50	95	125	165	16	292	132	160	-	190	240	100	254	130	186	20

DIMENSIONS

50Hz

Rev. J

PUMP 3(.)SF 32, 40, 50, 65

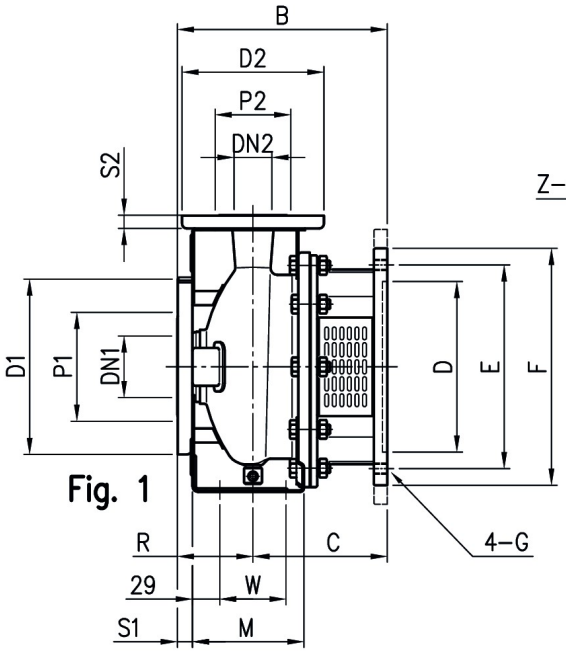

Fig. 1

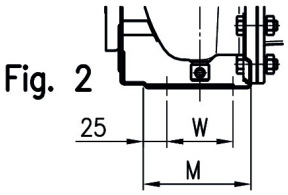

Fig. 2

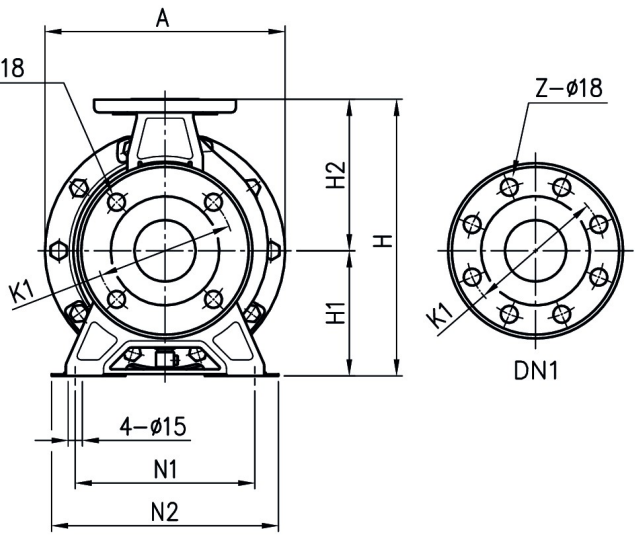

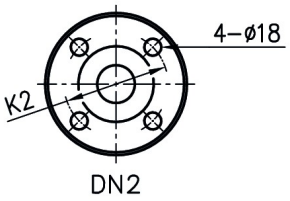

Pump type	Fig.	Dimensions [mm]																												Weight [kgf]
		DN1	P1	K1	D1	S1	Z [1]	Z [2]	DN2	P2	K2	D2	S2	H	H1	H2	M	N1	N2	R	W	A	B	C	D	E	F	G	
32-200/3	1	50	95	125	165	16	4	-	32	75	100	140	14	340	160	180	119	190	240	80	70	296	222	142	180	215	250	M12	24
32-200/4	1	50	95	125	165	16	4	-	32	75	100	140	14	340	160	180	119	190	240	80	70	296	222	142	180	215	250	M12	24
32-200/5.5	1	50	95	125	165	16	4	-	32	75	100	140	14	340	160	180	119	190	240	80	70	296	245	165	230	265	300	M12	28
32-200/7.5	1	50	95	125	165	16	4	-	32	75	100	140	14	340	160	180	119	190	240	80	70	296	245	165	230	265	300	M12	28
40-160/3	1	65	115	145	185	16	4	-	40	80	110	150	14	292	132	160	118	190	240	80	70	254	222	142	180	215	250	M12	19.5
40-160/4	1	65	115	145	185	16	4	-	40	80	110	150	14	292	132	160	118	190	240	80	70	254	222	142	180	215	250	M12	20
40-200/5.5	2	65	115	145	185	16	4	-	40	80	110	150	14	340	160	180	115	212	265	100	70	296	265	165	230	265	300	M12	28
40-200/7.5	2	65	115	145	185	16	4	-	40	80	110	150	14	340	160	180	115	212	265	100	70	296	265	165	230	265	300	M12	28
40-200/11	2	65	115	145	185	16	4	-	40	80	110	150	14	340	160	180	115	212	265	100	70	296	298	198	250	300	350	M16	41.5
50-125/3	2	65	115	145	185	16	4	-	50	95	125	165	16	292	132	160	114	190	240	100	70	254	242	142	180	215	250	M12	20
50-125/4	2	65	115	145	185	16	4	-	50	95	125	165	16	292	132	160	114	190	240	100	70	254	242	142	180	215	250	M12	20
50-160/5.5	2	65	115	145	185	16	4	-	50	95	125	165	16	340	160	180	115	212	265	100	70	296	265	165	230	265	300	M12	28.5
50-160/7.5	2	65	115	145	185	16	4	-	50	95	125	165	16	340	160	180	115	212	265	100	70	296	265	165	230	265	300	M12	28.5
50-200/9.2	2	65	115	145	185	16	4	-	50	95	125	165	16	360	160	200	115	212	265	100	70	296	265	165	230	265	300	M12	29
50-200/11	2	65	115	145	185	16	4	-	50	95	125	165	16	360	160	200	115	212	265	100	70	296	298	198	250	300	350	M16	41.5
50-200/15	2	65	115	145	185	16	4	-	50	95	125	165	16	360	160	200	115	212	265	100	70	296	298	198	250	300	350	M16	42.5
65-125/4	2	80	134	160	200	18	8	4	65	115	145	185	16	340	160	180	140	212	280	100	95	254	242	142	180	215	250	M12	26
65-125/5.5	2	80	134	160	200	18	8	4	65	115	145	185	16	340	160	180	140	212	280	100	95	254	265	165	230	265	300	M12	27.5
65-125/7.5	2	80	134	160	200	18	8	4	65	115	145	185	16	340	160	180	140	212	280	100	95	254	265	165	230	265	300	M12	28.5
65-160/7.5	2	80	134	160	200	18	8	4	65	115	145	185	16	360	160	200	140	212	280	100	95	296	265	165	230	265	300	M12	27
65-160/9.2	2	80	134	160	200	18	8	4	65	115	145	185	16	360	160	200	140	212	280	100	95	296	265	165	230	265	300	M12	30
65-160/11	2	80	134	160	200	18	8	4	65	115	145	185	16	360	160	200	140	212	280	100	95	296	298	198	250	300	350	M16	40
65-160/15	2	80	134	160	200	18	8	4	65	115	145	185	16	360	160	200	140	212	280	100	95	296	308	208	250	300	350	M16	42
65-200/15	2	80	134	160	200	18	8	4	65	115	145	185	16	405	180	225	140	250	320	100	95	296	308	208	250	300	350	M16	29.5
65-200/18.5	2	80	134	160	200	18	8	4	65	115	145	185	16	405	180	225	140	250	320	100	95	296	308	208	250	300	350	M16	29.5
65-200/22	2	80	134	160	200	18	8	4	65	115	145	185	16	405	180	225	140	250	320	100	95	296	308	208	250	300	350	M16	30

DIMENSIONS

50Hz

Rev. J

PUMP 3LSF 65-250, 80

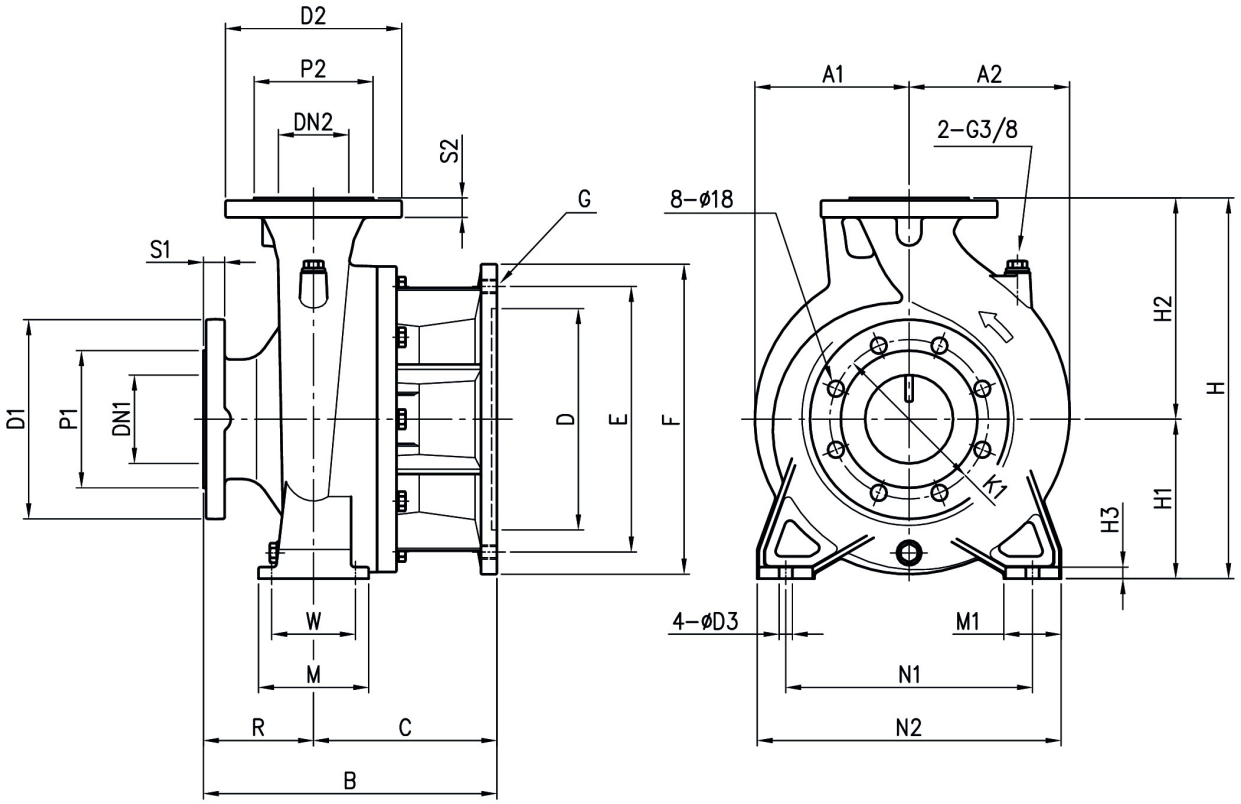

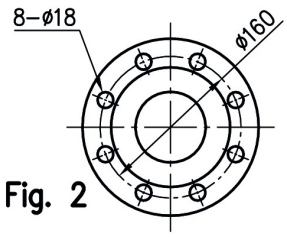

Fig. 2

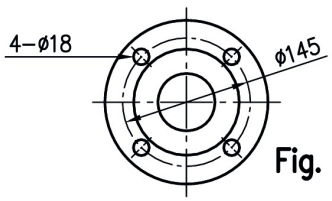

Fig. 1

Pump type	Dimensions [mm]																												Weight [kgf]
	DN1	P1	K1	D1	S1	DN2	P2	D2	S2	H	H1	H2	H3	R	W	N1	N2	M	M1	D3	B	C	D	E	F	G	A1	A2	
65-250/30	80	135	160	200	22	65 Fig. 1	120	185	20	450	200	250	15	100	120	280	360	160	80	19	308	208	300	350	400	4 - M16	200	200	70
65-250/37	80	135	160	200	22	65 Fig. 1	120	185	20	450	200	250	15	100	120	280	360	160	80	19	308	208	300	350	400	4 - M16	200	200	71
80-160/11	100	155	180	225	24	80 Fig. 2	135	200	22	405	180	225	13	125	95	250	320	125	65	15	333	208	250	300	350	4 - M16	175	175	52
80-160/15R	100	155	180	225	24	80 Fig. 2	135	200	22	405	180	225	13	125	95	250	320	125	65	15	333	208	250	300	350	4 - M16	175	175	52
80-160/15	100	155	180	225	24	80 Fig. 2	135	200	22	405	180	225	13	125	95	250	320	125	65	15	333	208	250	300	350	4 - M16	175	175	52
80-160/18.5	100	155	180	225	24	80 Fig. 2	135	200	22	405	180	225	13	125	95	250	320	125	65	15	333	208	250	300	350	4 - M16	175	175	53
80-200/22	100	155	180	225	24	80 Fig. 2	135	200	22	430	180	250	13	125	95	280	345	125	65	15	333	208	250	300	350	4 - M16	175	182	68
80-200/30	100	155	180	225	24	80 Fig. 2	135	200	22	430	180	250	13	125	95	280	345	125	65	15	333	208	300	350	400	4 - M16	200	200	72
80-200/37	100	155	180	225	24	80 Fig. 2	135	200	22	430	180	250	13	125	95	280	345	125	65	15	333	208	300	350	400	4 - M16	200	200	73
80-250/37	100	155	180	225	24	80 Fig. 2	135	200	22	480	200	280	15	125	120	315	400	160	80	19	361	236	300	350	400	4 - M16	200	200	83
80-250/45	100	155	180	225	24	80 Fig. 2	135	200	22	480	200	280	15	125	120	315	400	160	80	19	361	236	350	400	450	8 - M16	225	225	88
80-250/55	100	155	180	225	24	80 Fig. 2	135	200	22	480	200	280	15	125	120	315	400	160	80	19	373	248	450	500	550	8 - M16	275	275	100

DIMENSIONS

50Hz

Rev. J

PUMP 3(.)PF 32, 40, 50, 65

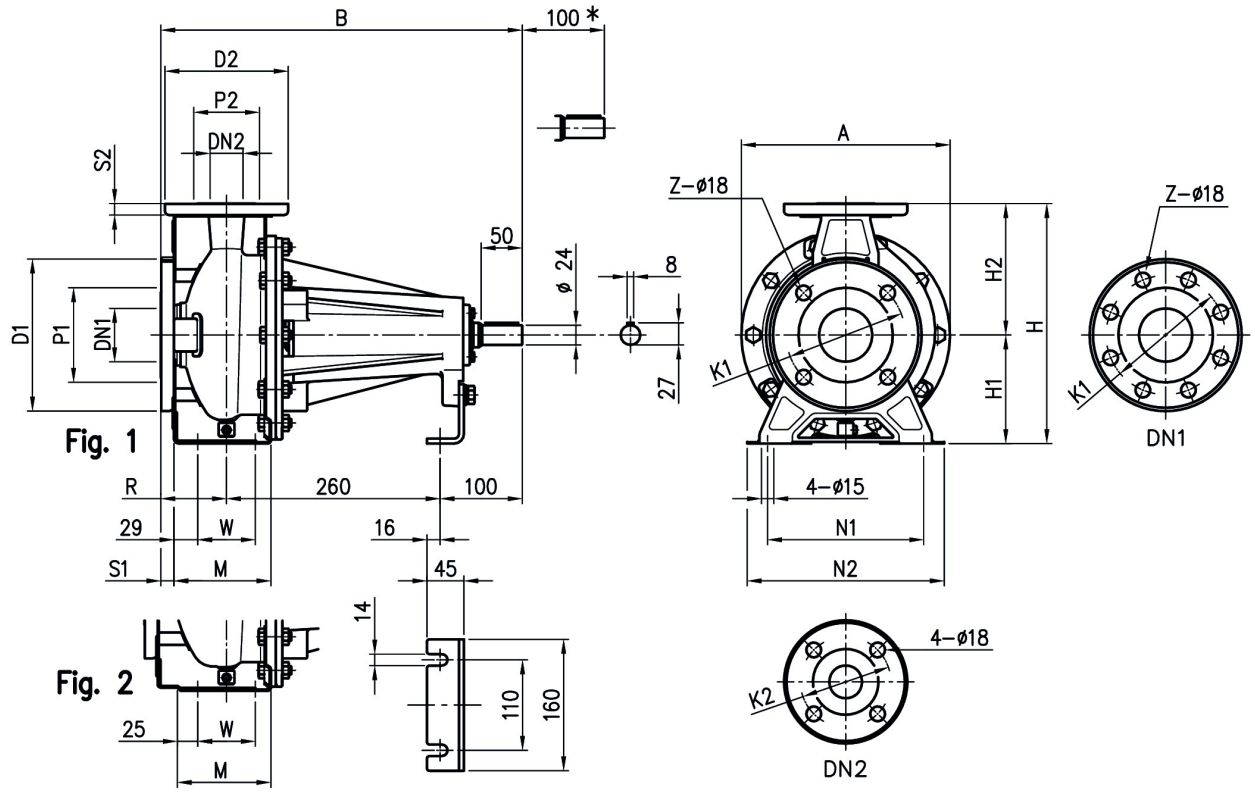

* Space for disassembly.

Pump type	Fig.	Dimensions [mm]																						Weight [kgf]
		DN1	P1	K1	D1	S1	Z [1]	Z [2]	DN2	P2	K2	D2	S2	H	H1	H2	M	N1	N2	R	W	A	B	
32-125	1	50	95	125	165	16	4	-	32	75	100	140	14	252	112	140	114	140	190	80	70	213	440	17
32-160	1	50	95	125	165	16	4	-	32	75	100	140	14	292	132	160	118	190	240	80	70	254	440	19
32-200	1	50	95	125	165	16	4	-	32	75	100	140	14	340	160	180	119	190	240	80	70	296	440	27
40-125	1	65	115	145	185	16	4	-	40	80	110	150	14	252	112	140	114	160	210	80	70	213	440	17
40-160	1	65	115	145	185	16	4	-	40	80	110	150	14	292	132	160	118	190	240	80	70	254	440	19
40-200	2	65	115	145	185	16	4	-	40	80	110	150	14	340	160	180	115	212	265	100	70	296	460	27
50-125	2	65	115	145	185	16	4	-	50	95	125	165	16	292	132	160	114	190	240	100	70	254	460	19
50-160	2	65	115	145	185	16	4	-	50	95	125	165	16	340	160	180	115	212	265	100	70	296	460	28
50-200	2	65	115	145	185	16	4	-	50	95	125	165	16	360	160	200	115	212	265	100	70	296	460	27
65-125	2	80	134	160	200	18	8	4	65	115	145	185	16	340	160	180	140	212	280	100	95	254	460	28
65-160	2	80	134	160	200	18	8	4	65	115	145	185	16	360	160	200	140	212	280	100	95	296	460	29
65-200	2	80	134	160	200	18	8	4	65	115	145	185	16	405	180	225	140	250	320	100	95	296	460	30

[1] Standard [2] On request

DIMENSIONS

50Hz

Rev. J

PUMP 3LP 65-250, 80

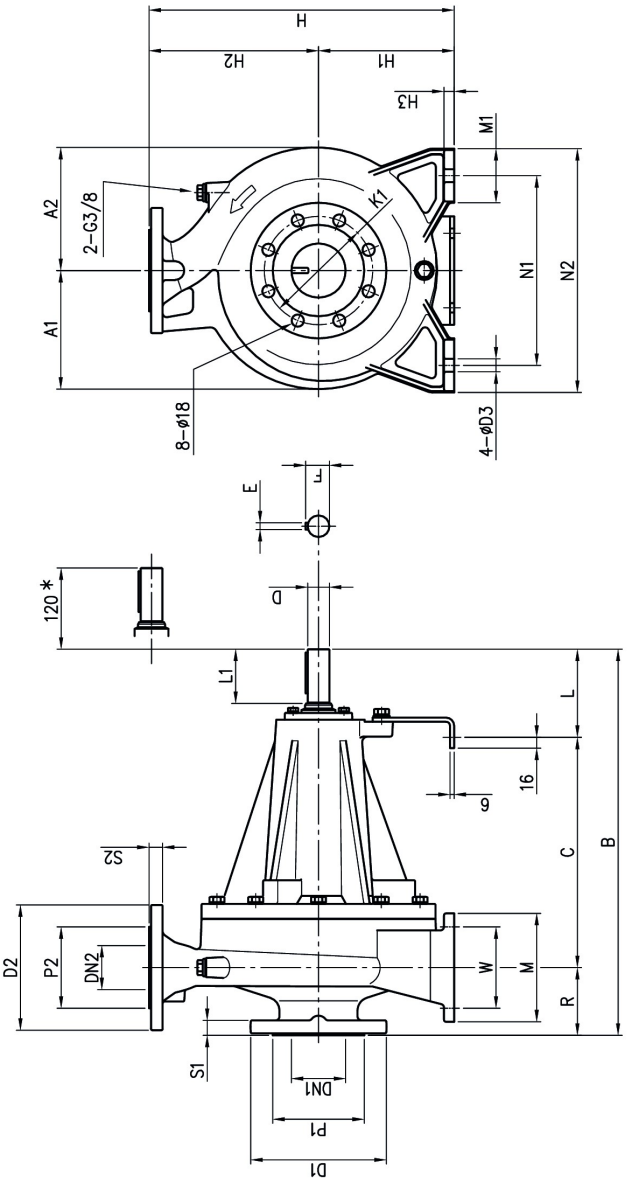

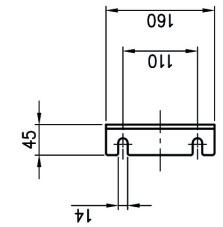

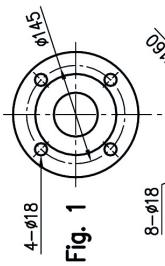

Fig. 1

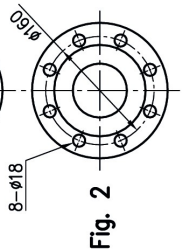

Fig. 2

* Space for disassembly

Pump type		Dimensions [mm]																								Weight [kgf]
		DN1	P1	K1	D1	S1	DN2	P2	D2	S2	H	H1	H2	H3	R	W	N1	N2	M	M1	L	L1	D	D3	E	F	A1	A2	B	C	
3LPF	65-250	80	135	160	200	22	65 Fig. 1	120	185	20	450	200	250	15	100	120	280	360	160	80	130	80	32	19	10	35	175	182	570	340	82
3LPF4	80-160	100	155	180	225	24	80 Fig. 2	135	200	22	405	180	225	13	125	95	250	320	125	65	100	50	24	15	8	27	147	173	485	260	56
3LPF	80-200	100	155	180	225	24	80 Fig. 2	135	200	22	430	180	250	13	125	95	280	345	125	65	130	80	32	15	10	35	175	182	595	340	83
3LPF4	80-250	100	155	180	225	24	80 Fig. 2	135	200	22	480	200	280	15	125	120	315	400	160	80	130	80	32	19	10	35	175	192	595	340	84

PACKING AND WEIGHT

50Hz

Rev. J

PACKING 3(.)SF

Type pumps	PACKING [mm] X	Y	Z	WEIGHT [Kg]	PACK TYPE
32-125/1.1	424	405	374	16	1
32-160/1.5				19	
32-160/2.2					
32-200/3				27	
32-200/4					
32-200/5.5				30	
32-200/7.5					
40-125/1.5				17	
40-125/2.2					
40-160/3				23	
40-160/4					
40-200/5.5				30.5	
40-200/7.5					
40-200/11	375	440	860	44.5	
50-125/2.2	424	405	374	22.5	
50-125/3					
50-125/4					
50-160/5.5				31.5	
50-160/7.5					
50-200/9.2				32	
50-200/11	375	440	860	45	
50-200/15				46	
65-125/4	424	405	374	29	
65-125/5.5				30.5	
65-125/7.5				31.5	
65-160/7.5				30	
65-160/9.2				33	
65-160/11	375	440	860	44	
65-160/15				46	
65-200/15				37	
65-200/18.5				33.5	
65-200/22				34	
65-250/30	475	608	780	75	2
65-250/37				76	
80-160/11	390	533	580	58	
80-160/15R				58	
80-160/15				58	
80-160/18.5				58	
80-200/22	475	610	780	75	
80-200/30				80	
80-200/37				81	
80-250/37				90	
80-250/45	762	690	894	95	
80-250/55				108	

TYPE 1

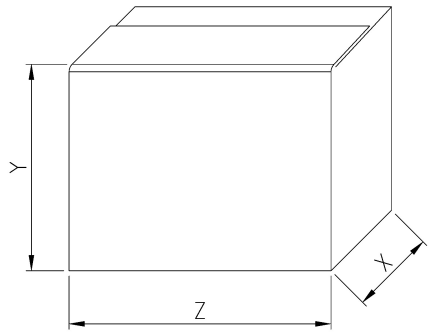

TYPE 2

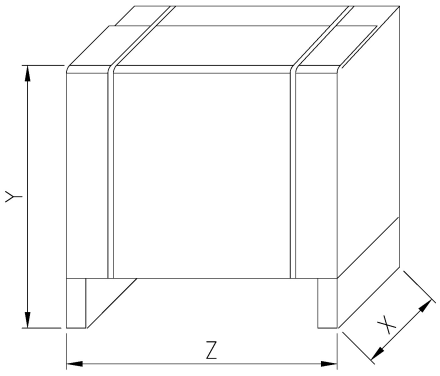

PACKING AND WEIGHT

50Hz

Rev. J

PACKING 3(.)PF

Type pumps	PACKING [mm] X	Y	Z	WEIGHT [Kg]	PACK TYPE
32-125	280	340	490	18	1
32-160/R				20	
32-160					
32-200/R	330	390	500	28.5	
32-200					
32-200/L					
40-125/R	280	340	490	18	
40-125					
40-160/R				20	
40-160					
40-200/R	330	390	500	28.5	
40-200					
40-200/L					
50-125/S	280	340	490	20	
50-125/R					
50-125					
50-160/R	330	390	500	29	
50-160					
50-200/R				29.5	
50-200					
50-200/L					
65-125/R				29	
65-125					
65-125/L					
65-160/S				30.5	
65-160/R					
65-160					
65-160/L					
65-200/R	390	533	580	32	2
65-200					
65-200/L					
65-250	475	608	780	86	
65-250/L					
80-160/S	390	533	580	64	
80-160/R					
80-160					
80-160/L					
80-200/R	475	610	780	87	
80-200					
80-200/L					
80-250/R				93	
80-250					
80-250/L					

TYPE 1

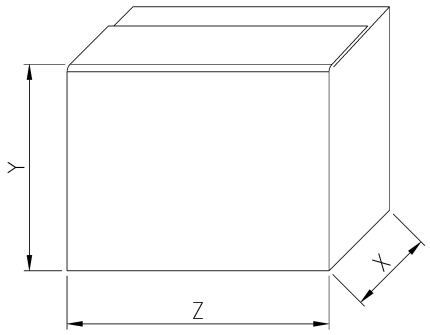

TYPE 2

