EBARA

Japanese Technology since 1912

# CMA-B-C-D

## Data Book 50Hz

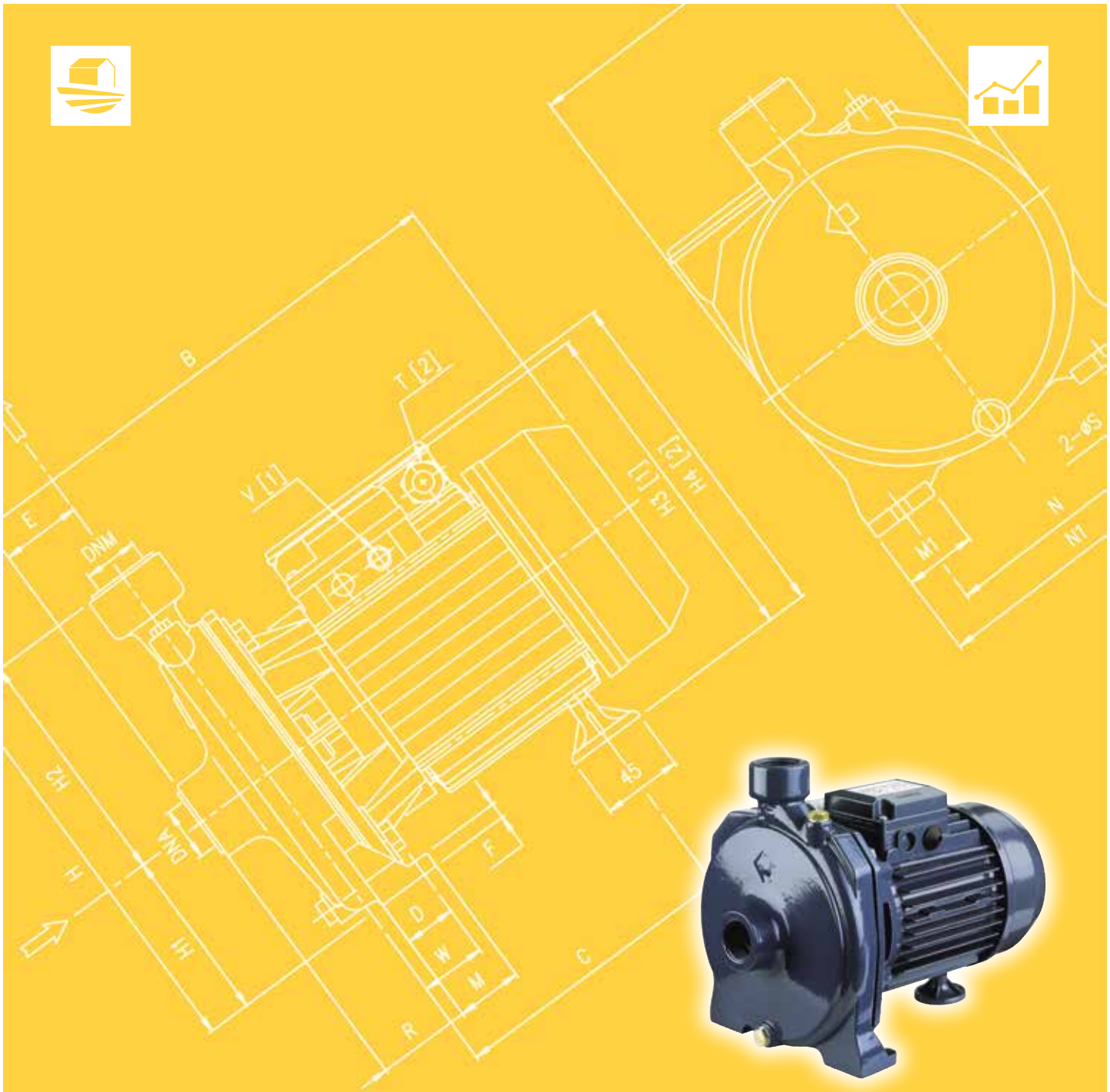

## CONTENTS

50Hz

Rev. R


| | Page |
|---|---|
| **- SPECIFICATIONS** | **200** |
| SELECTION CHART CMA-CMB-CMC-CMD | 201 |
| TYPE KEY AND CURVE SPECIFICATIONS | 202-203 |
| PERFORMANCE CURVE CMA | 204 |
| PERFORMANCE CURVE CMB | 205 |
| PERFORMANCE CURVE CMC | 206 |
| PERFORMANCE CURVE CMD | 207 |
| **- CONSTRUCTIONS** | **300** |
| SECTIONAL VIEW DRAWING (UP TO 1.00) | 300 |
| SECTIONAL VIEW TABLE (UP TO 1.00) | 301 |
| SECTIONAL VIEW DRAWING (1.50 AND ABOVE) | 302 |
| SECTIONAL VIEW TABLE (1.50 AND ABOVE) | 303 |
| MECHANICAL SEAL (UP TO 1.00) | 304 |
| MECHANICAL SEAL (1.50 AND ABOVE) | 305 |
| BEARINGS | 306 |
| **- DIMENSIONS AND WEIGHT** | **400** |
| PUMP DRAWING | 400 |
| DIMENSION PUMP TABLE | 401 |
| PACKING | 402 |
| **- TECNICAL DATA** | **500** |
| MOTOR DATA | 500 |
| NOISE DATA | 500 |

## SPECIFICATION

50Hz

Rev.R

| PUMP | | | |
|---|---|---|---|
| Liquid Handled | Type of liquid | | Clean water |
| | Temperature | [°C] | min. +5<br>max. +40 (CMA up to 1.00)<br>max. +90 (the other) |
| Maximum working pressure | | [MPa] | 0.6 (CMA up to 1.00 ; CMB up to 3.00; CMC; CMD)<br>0.8 (the other) |
| Construction | Impeller | | Closed centrifugal |
| | Shaft seal type | | Mechanical seal |
| | Bearing | | Sealed ball bearing |
| Pipe Connection | Suction | | G 1" (CMA up to 1.00) UNI ISO 228<br>G 1"¼ (CMA 1.50 and above) UNI ISO 228<br>G 2" (CMB - CMC) UNI ISO 228<br>G 2"½ (CMD ) UNI ISO 228 |
| | Discharge | | G 1" (CMA) UNI ISO 228<br>G 1"¼ (CMB) UNI ISO 228<br>G 2" (CMC) UNI ISO 228<br>G 2"½ (CMD) UNI ISO 228 |
| Material | Casing | | Cast iron |
| | Impeller | | PPE+PS glass fibre reinforced - Brass - Cast iron<br>see application page 301-303 |
| | Shaft seal | | Ceramic/Carbon/NBR |
| | Shaft | | AISI 416 (integral)<br>AISI 303 (wet extension)<br>AISI 304 (wet extension) see application page 301-303 |
| | Bracket | | Cast iron - Aluminium see application page 301-303 |
| | Casing cover | | AISI 304 see application page 301-303 |
| Applicable standard of test | | | ISO 9906 – Annex A |

| MOTOR | | | |
|---|---|---|---|
| Type | | Electric - TEFC | |
| | | Single Phase | Three Phase |
| Efficiency level (Reg. 1781/2019) | | - | IE3 |
| No. Of Poles | | 2 | |
| Rotation speed | [min-1] | ≈ 2800 | |
| Insulation Class | | F | |
| Protection degree (CEI EN 60034-5) | | IP 44 | |
| Power rating | [kW] | 0.37 ÷ 1.5 | 0.37 ÷ 4 |
| | [HP] | 0.5 ÷ 2 | 0.5 ÷ 5.5 |
| Frequency | [Hz] | 50 | |
| Voltage | [V] | 230 ±10% | 230/400 ±10% |
| Capacitor | | Built in | - |
| Over load protection | | Built in | Provided by the user |
| Casing material | | Aluminium | |
| Base material / motor support | | Aluminium / Cast iron / Plastic foot | |
| Dimensions of cable entry | | PG11 - PG13.5 – PG16 - M16x1.5 - M20x1.5<br>(see dimensions page 401) | |

## SELECTION CHART

50Hz

Rev. R

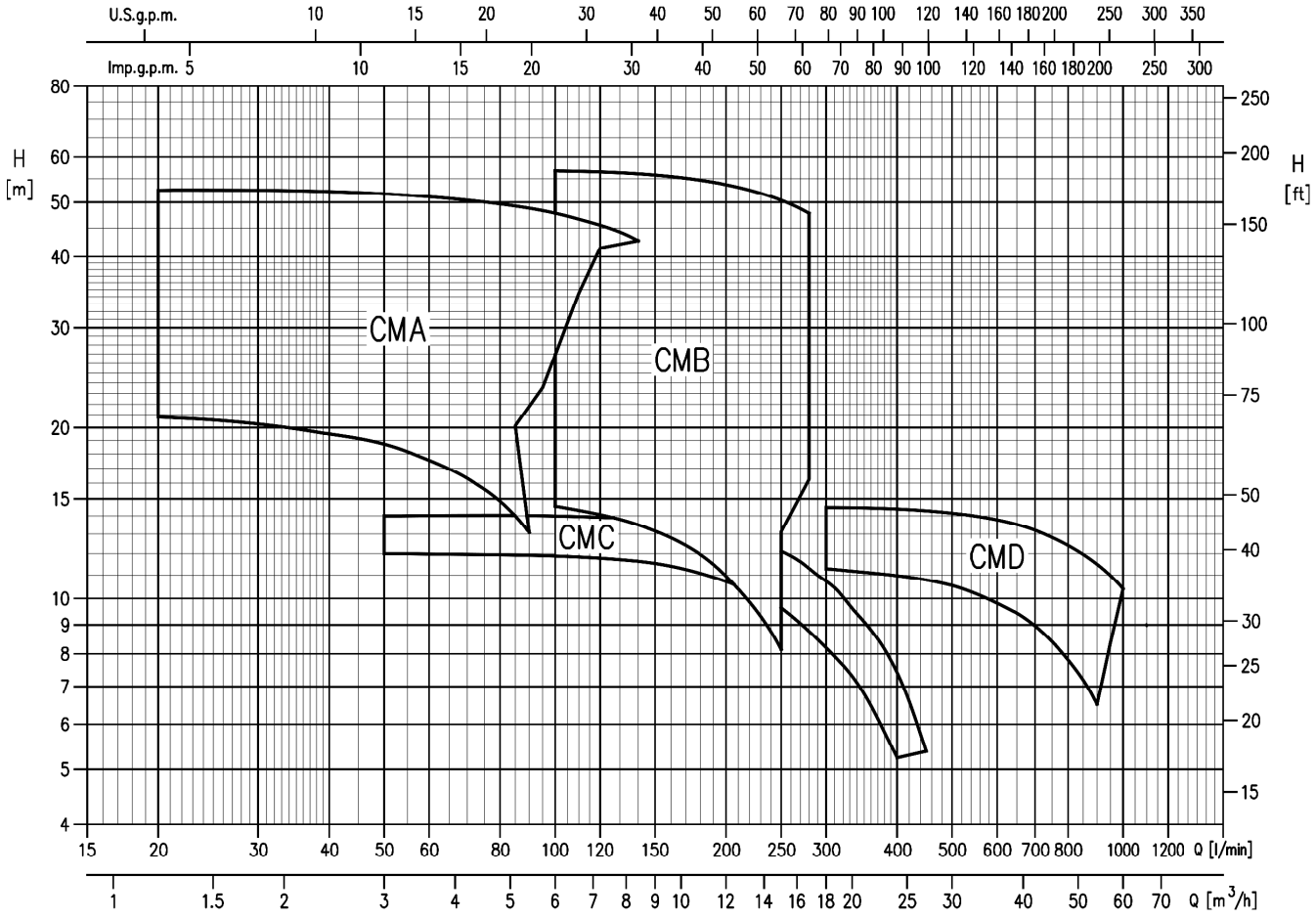

## SELECTION CHART

50Hz

Rev. R

### CMA

| Pump type | | Power | | Q=Capacity | | | | | | | | | | | |
|---|---|---|---|---|---|---|---|---|---|---|---|---|---|---|---|
| | | | | l/min | 0 | 20 | 40 | 60 | 80 | 85 | 90 | 95 | 110 | 120 | 140 |
| Single Phase | Three Phase | [kW] | [HP] | m³/h | 0 | 1.2 | 2.4 | 3.6 | 4.8 | 5.1 | 5.4 | 5.7 | 6.6 | 7.2 | 8.4 |
| | | | | H=Total manometric head in meters | | | | | | | | | | | |
| CMA 0,50 M | CMA 0,50 T | 0.37 | 0.5 | 21.7 | 20.9 | 19.5 | 17.6 | 14.9 | 14.0 | 13.1 | - | - | - | - | |
| CMA 0,75 M | CMA 0,75 T | 0.55 | 0.75 | 31.6 | 29.7 | 27.8 | 24.9 | 21.1 | 20.2 | - | - | - | - | - | |
| CMA 1.00 M | CMA 1.00 T | 0.75 | 1 | 33.6 | 33.0 | 31.9 | 29.9 | 26.6 | 25.6 | 24.6 | 23.5 | - | - | - | |
| CMA 1.50 M | CMA 1.50 T | 1.1 | 1.5 | 39.8 | 39.5 | 39.0 | 38.3 | 37.0 | 36.5 | 36.1 | 35.6 | 34.5 | - | - | |
| CMA 2.00 M | CMA 2.00 T | 1.5 | 2 | 48 | 47.5 | 47 | 46 | 45 | 45 | 44.5 | 44 | 43 | 42 | - | |
| - | CMA 3.00 T | 2.2 | 3 | 53.5 | 53 | 52.5 | 51 | 49.5 | 49 | 49 | 48.5 | 46.5 | 45.5 | 42.5 | |

### CMB

| Pump type | | Power | | Q=Capacity | | | | | | |
|---|---|---|---|---|---|---|---|---|---|---|
| | | | | l/min | 0 | 100 | 150 | 200 | 250 | 280 |
| Single Phase | Three Phase | [kW] | [HP] | m³/h | 0 | 6.0 | 9.0 | 12.0 | 15.1 | 16.9 |
| | | | | H=Total manometric head in meters | | | | | | |
| CMB 0,75 M | CMB 0,75 T | 0.55 | 0.75 | 14.9 | 14.6 | 13.2 | 10.9 | 8.1 | - | |
| CMB 1.00 M | CMB 1.00 T | 0.75 | 1 | 18.7 | 18.6 | 17.5 | 15.7 | 13.1 | - | |
| CMB 1.50 M | CMB 1.50 T | 1.1 | 1.5 | 22.4 | 22.5 | 21.6 | 20 | 17.8 | 16.2 | |
| CMB 2.00 M | CMB 2.00 T | 1.5 | 2 | 30.6 | 30.8 | 29.7 | 28.0 | 25.4 | 23.6 | |
| - | CMB 3.00 T | 2.2 | 3 | 35.3 | 35.4 | 34.4 | 32.7 | 30.2 | 28.5 | |
| - | CMB 4.00 T | 3 | 4 | 46.5 | 45.5 | 44 | 42 | 37.8 | 36.2 | |
| - | CMB 5.50 T | 4 | 5.5 | 57 | 57 | 56 | 53.5 | 50.5 | 48 | |

### CMC

| Pump type | | Power | | Q=Capacity | | | | | | |
|---|---|---|---|---|---|---|---|---|---|---|
| | | | | l/min | 0 | 50 | 100 | 200 | 300 | 400 | 450 |
| Single Phase | Three Phase | [kW] | [HP] | m³/h | 0 | 3.0 | 6.0 | 12.0 | 18.1 | 24.1 | 27.1 |
| | | | | H=Total manometric head in meters | | | | | | | |
| CMC 0,75 M | CMC 0,75 T | 0.55 | 0.75 | 12 | 12 | 11.9 | 10.7 | 8.3 | 5.2 | - | |
| CMC 1.00 M | CMC 1.00 T | 0.75 | 1 | 14 | 14 | 14 | 13.1 | 10.8 | 7.4 | 5.4 | |

### CMD *

| Pump type | | Power | | Q=Capacity | | | | | | | |
|---|---|---|---|---|---|---|---|---|---|---|---|
| | | | | l/min | 0 | 250 | 400 | 600 | 800 | 900 | 950 | 1000 |
| Single Phase | Three Phase | [kW] | [HP] | m³/h | 0 | 15.1 | 24.1 | 36.1 | 48.2 | 54.2 | 57.2 | 60.2 |
| | | | | H=Total manometric head in meters | | | | | | | | |
| CMD 1.50 M | CMD 1.50 T | 1.1 | 1.5 | 11.5 | 11.3 | 11 | 9.8 | 7.8 | 6.5 | - | - | |
| CMD 2.00. M | CMD 2.00. T | 1.5 | 2 | 13.2 | 13.1 | 12.9 | 12 | 10.2 | 9 | 8.4 | - | |
| - | CMD 3.00 T | 2.2 | 3 | 15.9 | 16.1 | 15.8 | 15 | 13.1 | 11.9 | 11.2 | 10.4 | |

* PRODUCT NOT AVAILABLE FOR THE EUROPEAN MARKET

## TYPE KEY AND CURVE SPECIFICATIONS

50Hz

Rev. R

### TYPE KEY

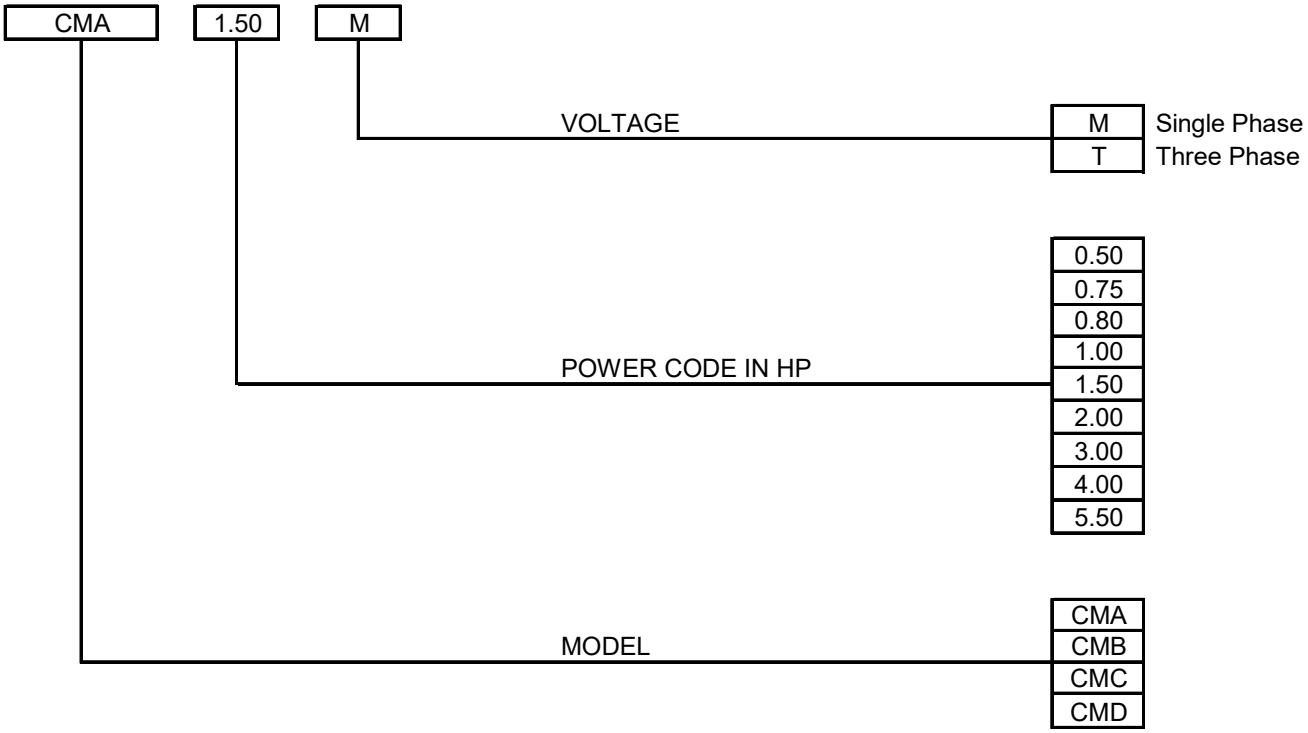

## PERFORMANCE CURVE SPECIFICATIONS

The specifications below qualify the curves shown on the following pages.

Tolerances according to ISO 9906 Annex A
The curves refer to effective speed of asynchronous motors at 50 Hz
Measurements were carried out with clean water at 20°C of temperature and with a kinematic viscosity of $\nu$ = 1 mm²/s (1 cSt)
In order to avoid the risk of over-heating, the pumps should not be used at a flow rate below 10% of best efficiency point.

Symbols explanation:

| | | |
|---|---|---|
| Q | = | volume flow rate |
| H | = | total head |
| $P_2$ | = | pump power input (shaft power) |
| $\eta$ | = | pump efficiency |
| MEI | = | minimum efficiency index |

The minimun efficiency index (MEI) is a measure of the quality of a pump size in respect to its mean efficiency. The minimum efficiency index is based on the hydraulic efficiency and on the head at the best efficiency point.

The efficiency of a pump with trimmed impeller is usually lower than that of a pump with the full impeller diameter. The trimming of the impeller will adapt the pump to a fixed duty point, leading to reduced energy consumption. The minimum efficiency index (MEI) is based on the full impeller diameter.

The operation of these water pumps with variabile duty points may be more efficient end economic when controlled, for example, by the use of a variable speed drive that matches the pump duty to the system.

**MEI = 0.4 for ESCC 2900 rpm**

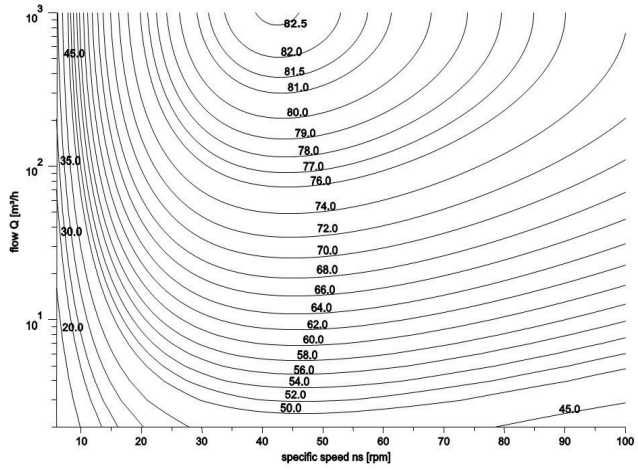


**MEI = 0.7 for ESCC 2900rpm**

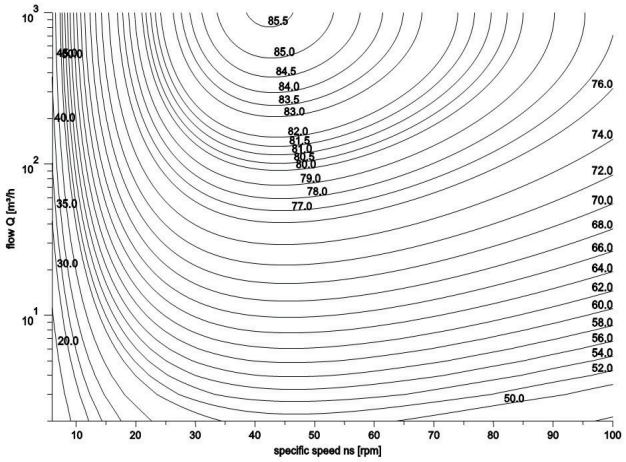

## PERFORMANCE CURVE

50Hz

Rev. R

**CMA 0.50 (0.37 kW) - Impeller diameter = 130 mm**
**CMA 0.75 (0.55 kW) - Impeller diameter = 161 mm**
**CMA 1.00 (0.75 kW) - Impeller diameter = 160 mm**
**CMA 1.50 (1.1 kW) MEI > 0.70 - Impeller diameter = 173 mm**
**CMA 2.00 (1.5 kW) MEI > 0.70 - Impeller diameter = 191 mm**
**CMA 3.00 (2.2 kW) MEI > 0.70 - Impeller diameter = 201 mm**

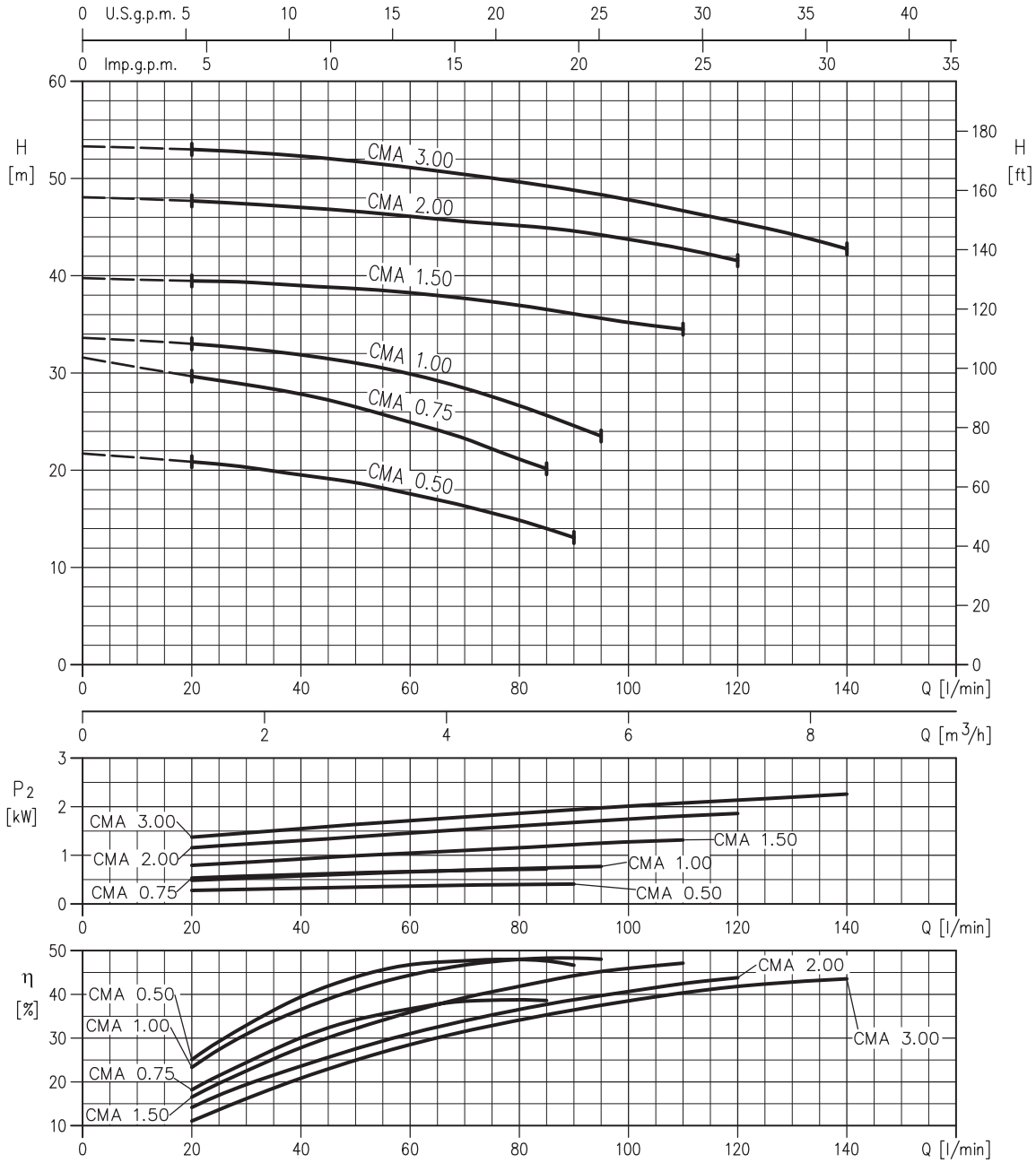


Rotation speed ≈ 2800 min$^{-1}$
Test standard: ISO 9906 – Annex A

## PERFORMANCE CURVE

50Hz

Rev. R

**CMB 0.75 (0.55 kW) MEI > 0.60 - Impeller diameter = 112 mm**
**CMB 1.00 (0.75 kW) MEI > 0.60 - Impeller diameter = 123 mm**
**CMB 1.50 (1.1 kW) MEI > 0.60 - Impeller diameter = 132 mm**
**CMB 2.00 (1.5 kW) MEI > 0.70 - Impeller diameter = 155 mm**
**CMB 3.00 (2.2 kW) MEI > 0.70 - Impeller diameter = 164.5 mm**
**CMB 4.00 (3 kW) MEI > 0.70 - Impeller diameter = 189 mm**
**CMB 5.50 (4 kW) MEI > 0.70 - Impeller diameter = 204 mm**

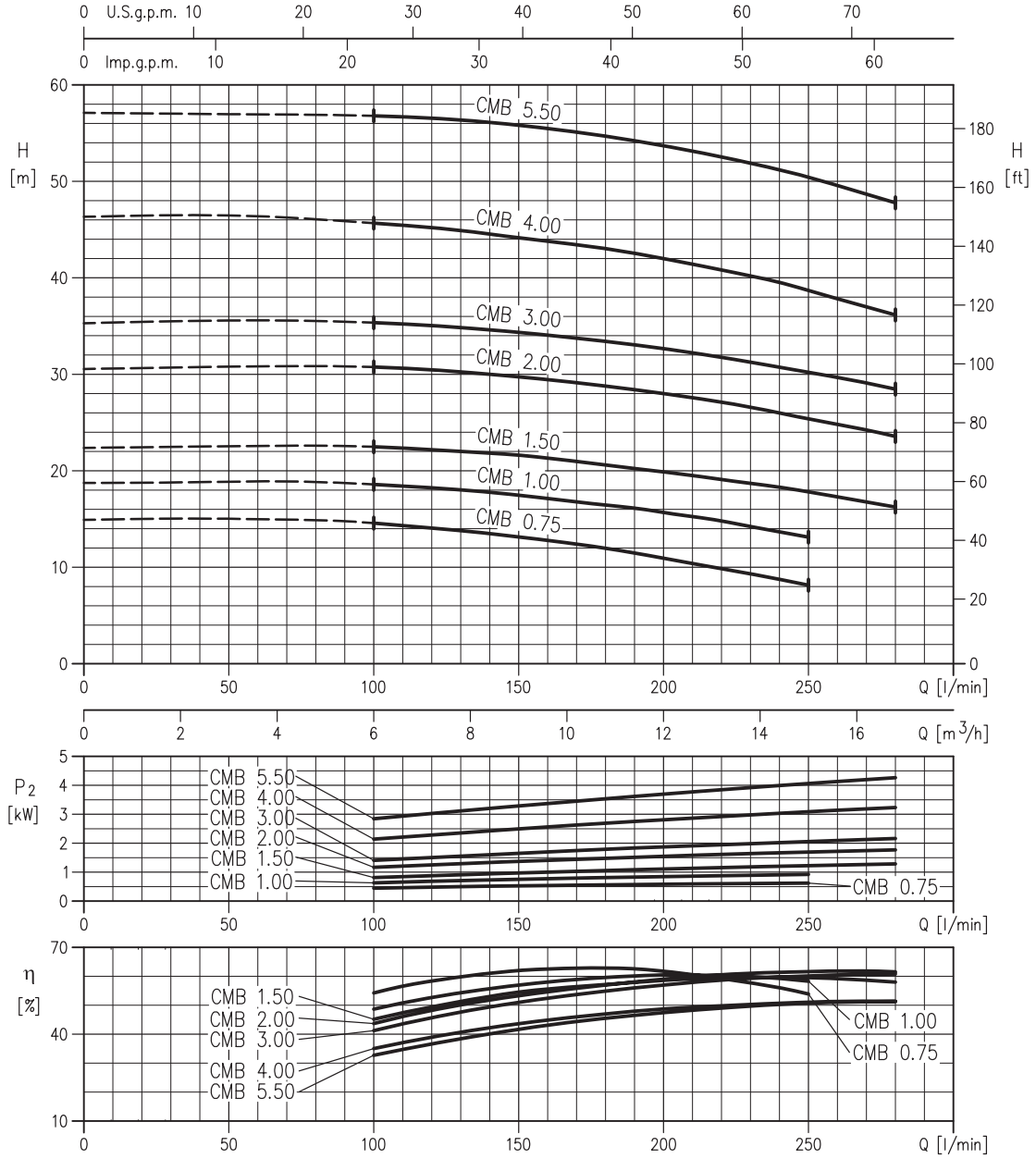


Rotation speed ≈ 2800 min$^{-1}$
Test standard: ISO 9906 – Annex A

## PERFORMANCE CURVE

50Hz

Rev. R

**CMC 0.75 (0.55 kW) MEI > 0.70 - Impeller diameter = 100 mm**
**CMC 1.00 (0.75 kW) MEI > 0.70 - Impeller diameter = 112 mm**

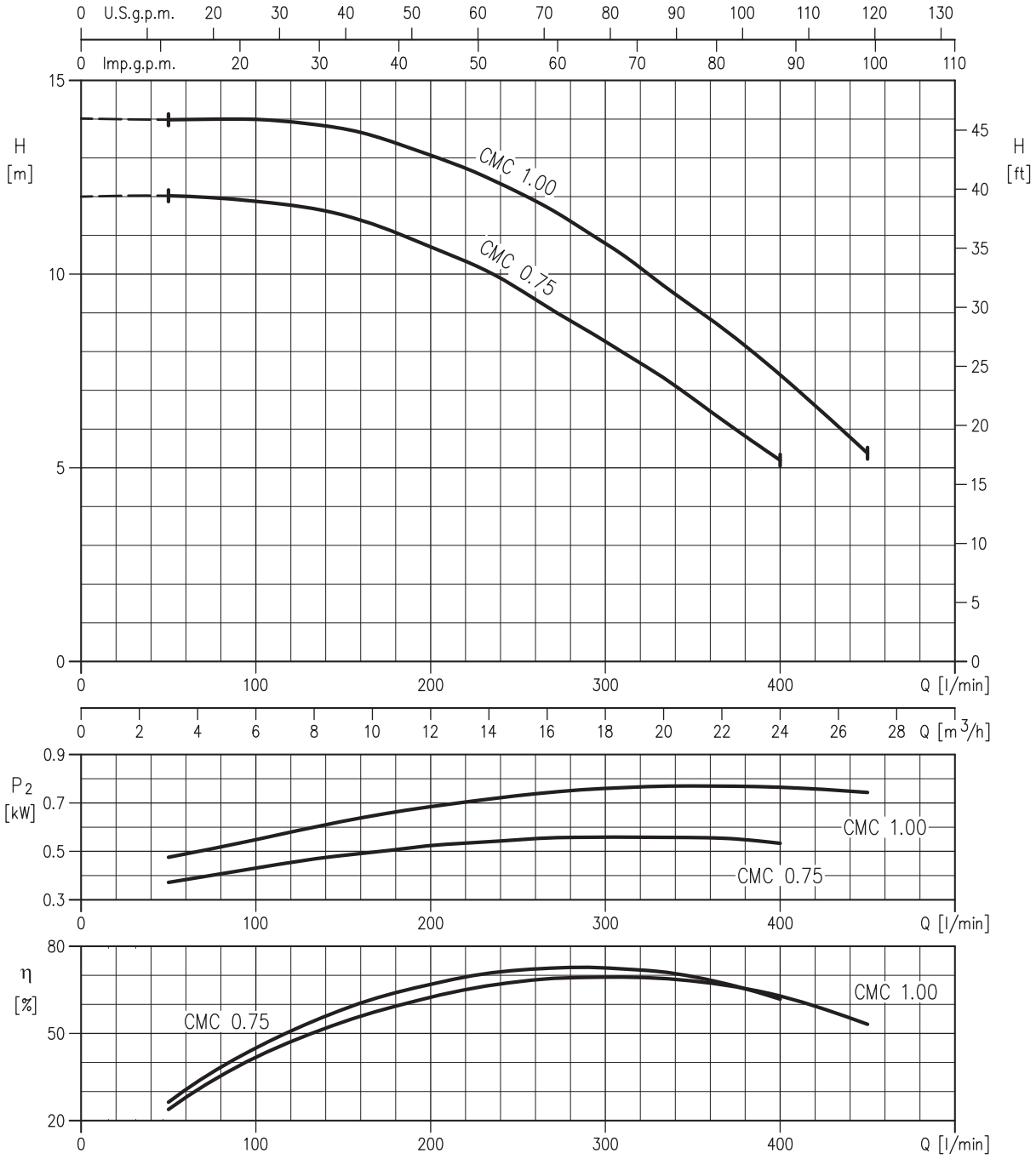


Rotation speed ≈ 2800 min$^{-1}$
Test standard: ISO 9906 – Annex A

## PERFORMANCE CURVE

50Hz

Rev. R

**CMD 1.50 (1.1 kW) - Impeller diameter = 105 mm**
**CMD 2.00 (1.5 kW) - Impeller diameter = 110 mm**
**CMD 3.00 (2.2 kW) - Impeller diameter = 120 mm**

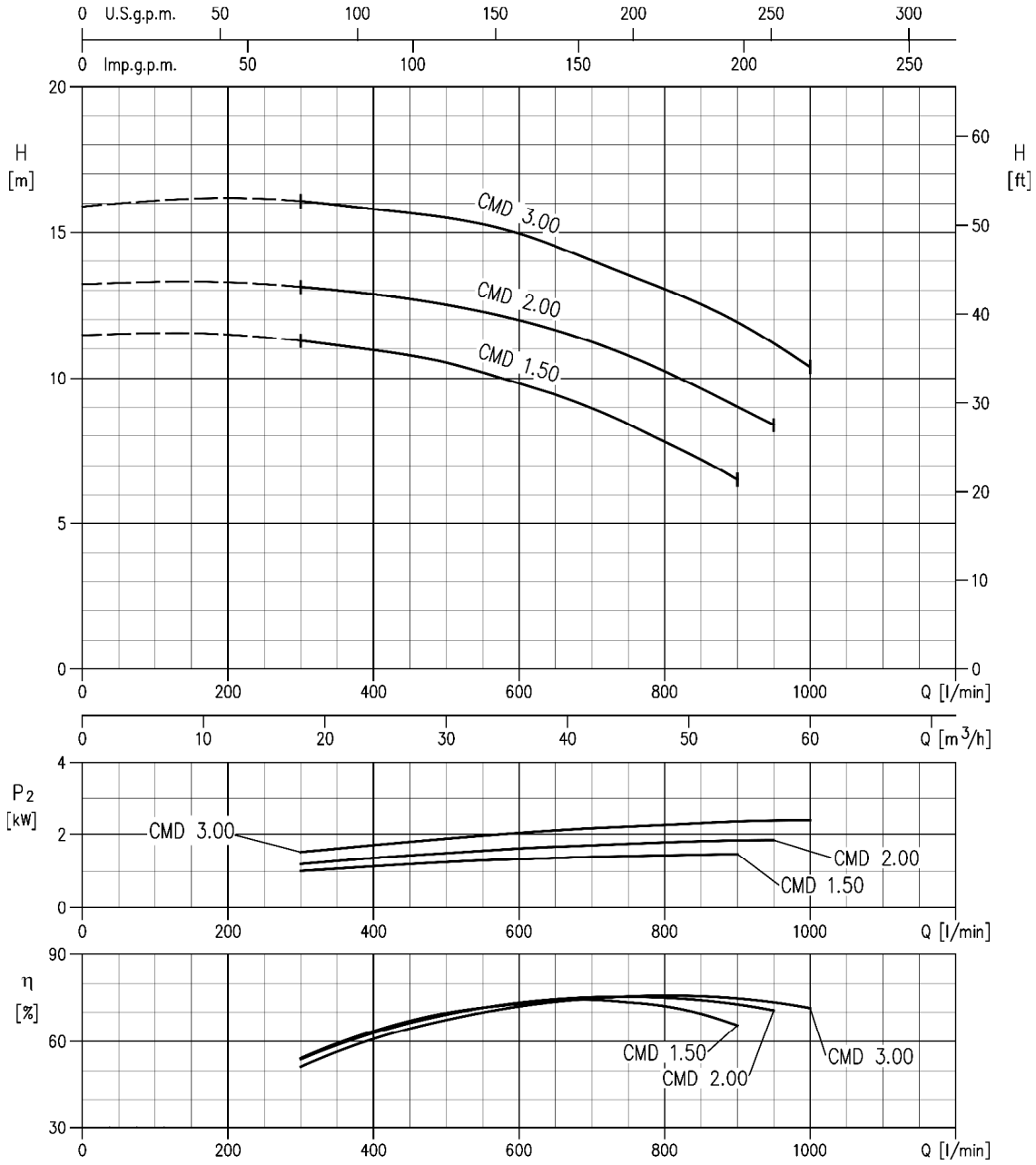


**PRODUCT NOT AVAILABLE FOR THE EUROPEAN MARKET**

Rotation speed ≈ 2850 $min^{-1}$
Test standard: ISO 9906 – Annex A

**SECTIONAL VIEW DRAWING**
**(UP TO 1.00)**

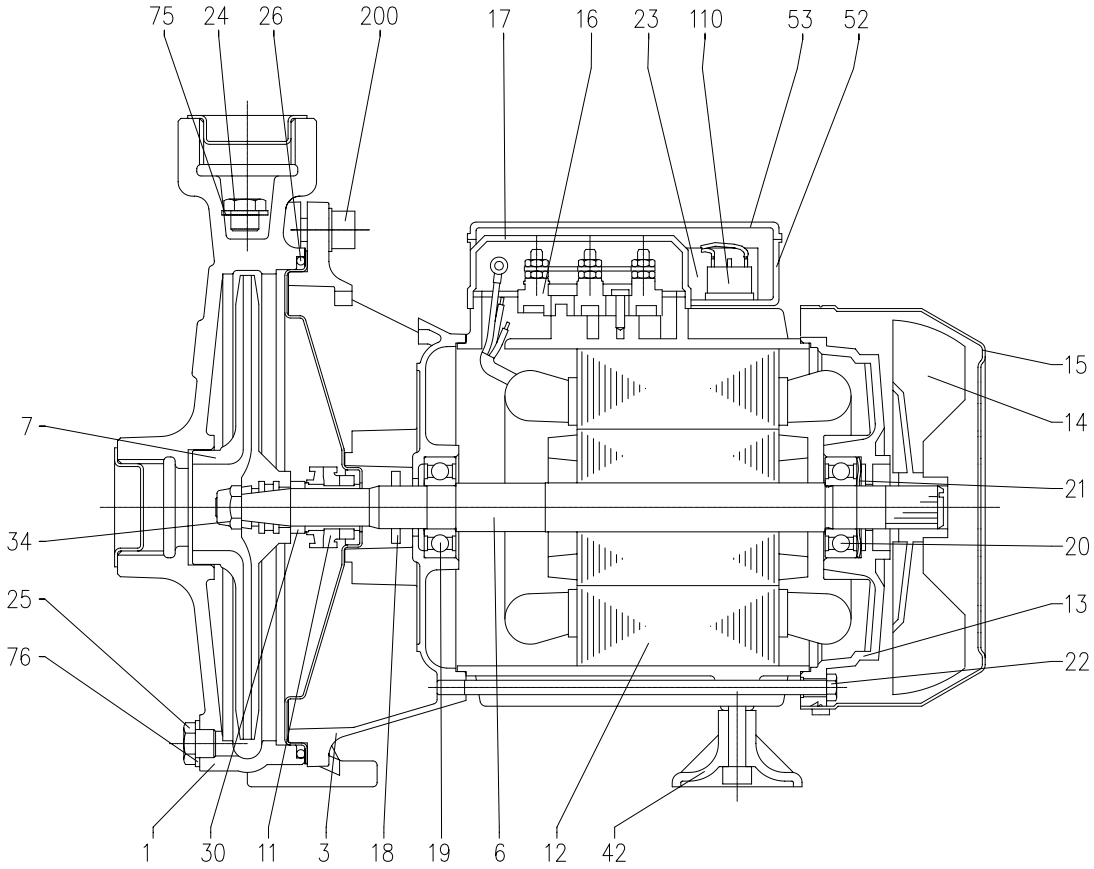

## SECTIONAL VIEW TABLE (UP TO 1.00)

| N° | PART NAME | | MATERIAL | DIMENSIONS | STANDARD | Q.TY |
|---|---|---|---|---|---|---|
| 1 | Casing | | Cast iron | | | 1 |
| 3 | Motor bracket | | Aluminium | | | 1 |
| 4 | Casing cover | | AISI 304 | | | 1 |
| 6 | Shaft with rotor | | [1] | | | 1 |
| 7 | Impeller | | [2] | | | 1 |
| 11 | Mechanical seal | | Carbon/Ceramic/NBR | See page 304 | | 1 |
| 12 | Motor frame with stator | | - | | | 1 |
| 13 | Motor cover | | Aluminium | | | 1 |
| 14 | Fan | | PA | | | 1 |
| 15 | Fan cover | | Fe P04 Galvanized | | | 1 |
| 16 | Terminal box | | - | | | 1 |
| 17 | Terminal box cover [3] | | Aluminium | | | 1 |
| 18 | Splash ring | CMA 0.50 | NBR | D25x11.5x2.5 | EBARA DRAWING | 1 |
| | | other models | | D25x14.5x2.5 | | |
| 19 | Pump side ball bearing | | - | | | 1 |
| 20 | Fan side ball bearing | | - | | | 1 |
| 21 | Adjusting ring | | Steel C70 | | | 1 |
| 22 | Tie rod | | Fe 42 Galvanized | | | 4 |
| 23 | Capacitor [4] | | - | | | 1 |
| 24 | Priming plug | | Brass | G 1/8" | UNI 338 | 1 |
| 25 | Drain plug | | Brass | G 1/8" | UNI 338 | 1 |
| 26 | O-ring | | NBR | | | 1 |
| 30 | Mechanical seal spacer [5] | | Brass | | | 1 |
| 34 | Impeller nut [6] | | AISI 304 | M8x1 | UNI7474 | 1 |
| 42 | Foot | | PP | | | 1 |
| 52 | Capacitor box [4] | | ABS class V-0 | | | 1 |
| 53 | Capacitor box cover [4] | | ABS class V-0 | | | 1 |
| 75 | Washer | | Aluminium | 10x16x1.5 | | 1 |
| 76 | Washer | | Aluminium | 10x16x1.5 | | 1 |
| 110 | Protector [4] | | - | | | - |
| 200 | Screw | CMA 0.50 | Zn Steel Cl. 8.8 | M6x16 | ISO 898-1 | 4 |
| | | CMA 0.75; 1.00<br>CMC 0.75; 1.00 | | M8x18 | | |
| | | CMB 0.75; 1.00 | | M8x22 | | |

[1] Material: AISI 416 (integral) for CMA 0.50
AISI 303 (wet extension) for other model;
[2] Material: PPE+PS glass fibre reinforced for version CMA
Cast iron for version CMB, CMC;
[3] Only for three phase
[4] Only for single phase
[5] Only for version: CMA 0.50, CMB 0.75-1.00, CMC 0.75-1.00
[6] Except for CMA 0.50

**SECTIONAL VIEW DRAWING**
**(1.50 AND ABOVE)**

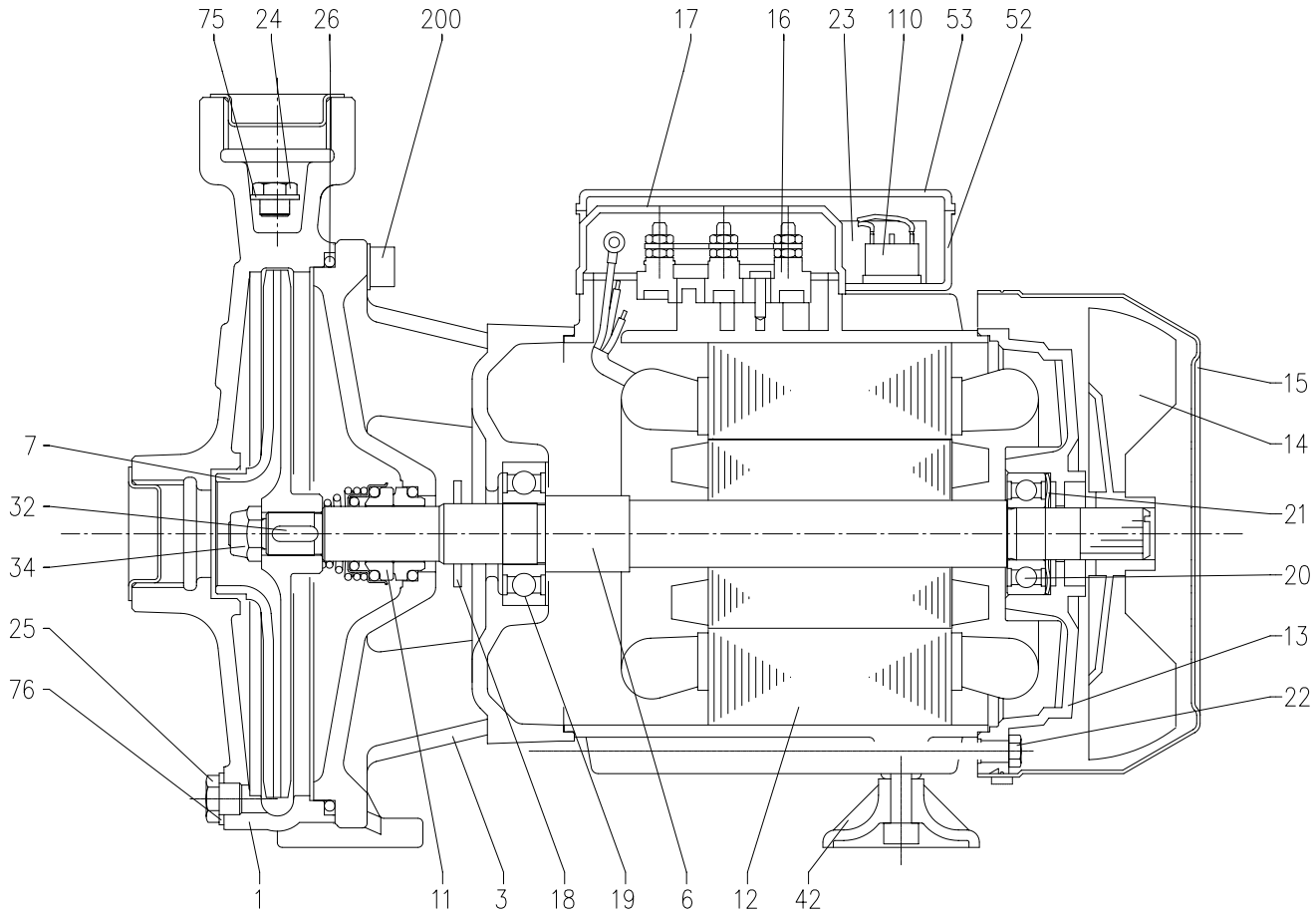

## SECTIONAL VIEW TABLE (1.50 AND ABOVE)

| N° | PART NAME | | MATERIAL | DIMENSIONS | STANDARD | Q.TY |
|---|---|---|---|---|---|---|
| 1 | Casing | | Cast iron | | | 1 |
| 3 | Motor bracket | | Cast iron | | | 1 |
| 6 | Shaft with rotor | | [1] | | | 1 |
| 7 | Impeller | | [2] | | | 1 |
| 11 | Mechanical seal | | Carbon/Ceramic/NBR | See page 305 | | 1 |
| 12 | Motor frame with stator | | - | | | 1 |
| 13 | Motor cover | | Aluminium | | | 1 |
| 14 | Fan | | PA | | | 1 |
| 15 | Fan cover | | Fe P04 Galvanized | | | 1 |
| 16 | Terminal board | | - | | | 1 |
| 17 | Terminal box cover [3] | | Aluminium | | | 1 |
| 18 | Splash ring | | NBR | D35x19.5x2.5 | EBARA DRAWING | 1 |
| 19 | Pump side ball bearing | | - | | | 1 |
| 20 | Fan side ball bearing | | - | | | 1 |
| 21 | Adjusting ring | | Steel C70 | | | 1 |
| 22 | Tie rod | | Fe 42 Galvanized | | | 4 |
| 23 | Capacitor [4] | | - | | | 1 |
| 24 | Priming plug | CMD 1.50; 2.00; 3.00; 4.00 | Brass | G 1/4" | UNI 338 | 1 |
| | | other models | | G 1/8" | | |
| 25 | Drain plug | CMD 1.50; 2.00; 3.00; 4.00 | Brass | G 1/4" | UNI 338 | 1 |
| | | other models | | G 1/8" | | |
| 26 | O-ring | | NBR | | | 1 |
| 32 | Key | | AISI 316 | | | 1 |
| 34 | Impeller nut | other models | AISI 304 | M10 | UNI 7474 | 1 |
| | | CMB 4.00; 5.50 | | M12x1.25 | | 1 |
| 42 | Foot | | PP | | | 1 |
| 52 | Capacitor box [4] | | ABS class V-0 | | | 1 |
| 53 | Capacitor box cover [4] | | ABS class V-0 | | | 1 |
| 75 | Washer | CMD 1.50; 2.00; 3.00; 4.00 | Aluminium | 13.5x19x1.5 | | 1 |
| | | other models | | 10x16x1.5 | | 1 |
| 76 | Washer | CMD 1.50; 2.00; 3.00; 4.00 | Aluminium | 13.5x19x1.5 | | 1 |
| | | other models | | 10x16x1.5 | | 1 |
| 110 | Protector [4] | | - | | | 1 |
| 200 | Screw | CMD 1.50; 2.00; 3.00; 4.00 | Zn Steel Cl. 8.8 | M8x25 | ISO 898-1 | 4 |
| | | CMB 1.50; 2.00; 3.00 | | M8x22 | | |
| | | CMA 1.50 | | M10x35 | | |
| | | CMA 2.00; 3.00 CMB 4.00; 5.50 | | M12x35 | | |

[1] Material: AISI303 (wet extension) for version CMA, CMB 1.50-2.00-3.00, CMD 1.50-2.00-3.00
AISI304 (wet extension) for version CMB 4.00-5.50

[2] Material: Brass for version: CMA, CMB 2.00-3.00-4.00-5.50
Cast iron for version: CMB 1.50, CMD

[3] Only for three phase

[4] Only for single phase

## CONSTRUCTION

50Hz

Rev. R

### MECHANICAL SEAL (UP TO 1.00)

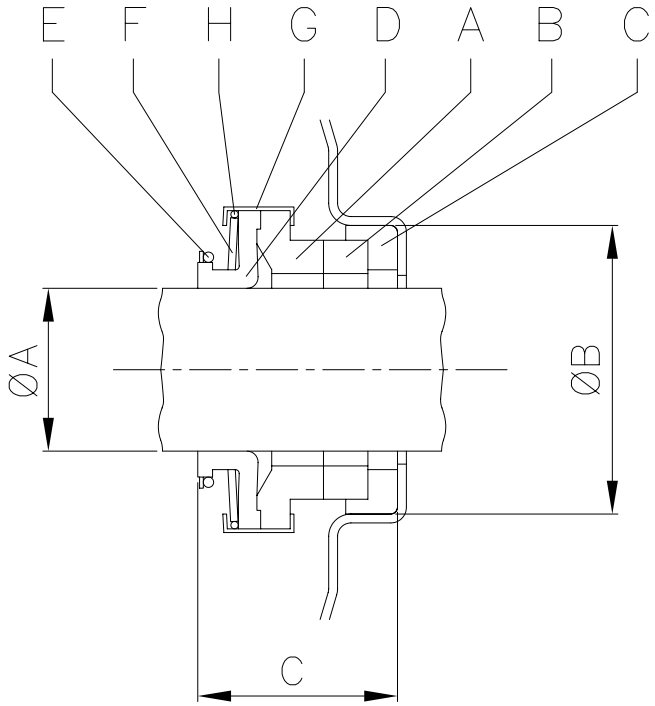


| Pump type | | Dimensions mm | | |
|---|---|---|---|---|
| Single phase | Three phase | Ø A | Ø B | C |
| CMA 0.50 M | CMA 0.50 T | 12 | 26 | 18.3 |
| CMA 0.75 M | CMA 0.75 T | 13 | 26 | 18.3 |
| CMA 1.00 M | CMA 1.00 T | 13 | 26 | 18.3 |
| CMB 0.75 M | CMB 0.75 T | 13 | 26 | 18.3 |
| CMB 1.00 M | CMB 1.00 T | 13 | 26 | 18.3 |
| CMC 0.75 M | CMC 0.75 T | 13 | 26 | 18.3 |
| CMC 1.00 M | CMC 1.00 T | 13 | 26 | 18.3 |

| REF | PART NAME | MATERIAL product standard |
|---|---|---|
| A | Rotary seal ring | carbon graphite |
| B | Stationary seal ring | ceramic |
| C | Gasket | NBR |
| D | Bellows | NBR |
| E | Ring | AISI 304 |
| F | Self driving spring | AISI 304 |
| G | Frame | AISI 304 |
| H | Retainer ring | AISI 304 |

## CONSTRUCTION

50Hz

Rev. R

### MECHANICAL SEAL (1.50 AND ABOVE)

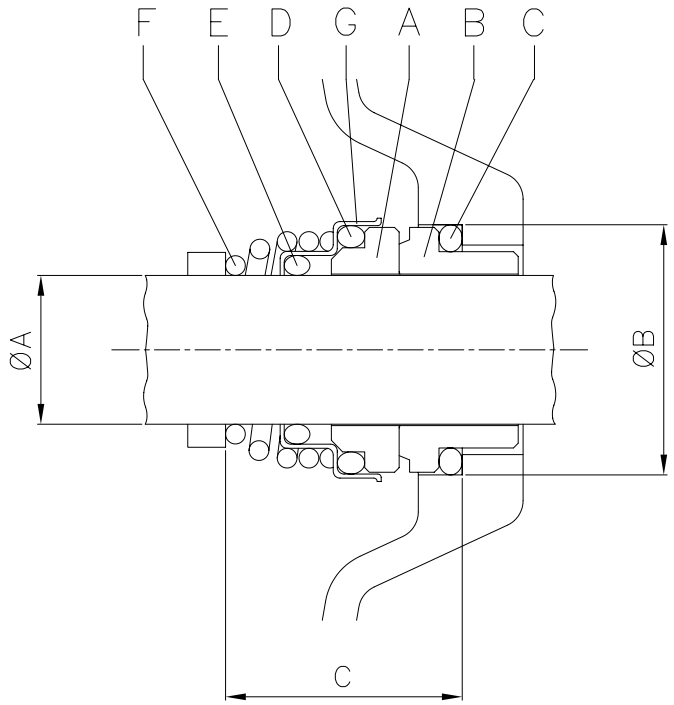


| Pump type | | Dimensions mm | | |
|---|---|---|---|---|
| Single phase | Three phase | Ø A | Ø B | C |
| CMA 1.50 M | CMA 1.50 T | 18 | 30.9 | 32 |
| CMA 2.00 M | CMA 2.00 T | 18 | 30.9 | 32 |
| - | CMA 3.00 T | 18 | 30.9 | 32 |
| CMB 1.50 M | CMB 1.50 T | 18 | 30.9 | 32 |
| CMB 2.00 M | CMB 2.00 T | 18 | 30.9 | 32 |
| - | CMB 3.00 T | 18 | 30.9 | 32 |
| - | CMB 4.00 T | 20 | 30.9 | 33 |
| - | CMB 5.50 T | 20 | 30.9 | 33 |
| CMD 1.50 M | CMD 1.50 T | 18 | 30.9 | 32 |
| CMD 2.00 M | CMD 2.00 T | 18 | 30.9 | 32 |
| - | CMD 3.00 T | 18 | 30.9 | 32 |

| REF | PART NAME | MATERIAL product standard |
|---|---|---|
| A | Rotary seal ring | ceramic |
| B | Stationary seal ring | carbon graphite |
| C | O Ring | NBR |
| D | O Ring | NBR |
| E | O Ring | NBR |
| F | Self driving spring | AISI 316 |
| G | Frame | AISI 304 |

## BEARINGS

| Pump Type | | Ball Bearing | |
|---|---|---|---|
| Single phase | Three Phase | Pump side | Fan side |
| CMA 0.50M | CMA 0.50T | 6201 2DW C3 | 6202 2DW C3 |
| CMA 0.75M | CMA 0.75T | 6202 2DW C3 | 6202 2DW C3 |
| CMA 1.00M | CMA 1.00T | 6202-ZZ C3 | 6202-ZZ C3 |
| CMA 1.50M | CMA 1.50T | 6204-ZZ C3 | 6203-ZZ C3 |
| CMA 2.00M | CMA 2.00T | 6204-ZZ C3 | 6203-ZZ C3 |
| - | CMA 3.00T | 6204-ZZ C3 | 6203-ZZ C3 |
| CMB 0.75M | CMB 0.75T | 6202 2DW C3 | 6202 2DW C3 |
| CMB 1.00M | CMB 1.00T | 6202-ZZ C3 | 6202-ZZ C3 |
| CMB 1.50M | CMB 1.50T | 6204-ZZ C3 | 6203-ZZ C3 |
| CMB 2.00M | CMB 2.00T | 6204-ZZ C3 | 6203-ZZ C3 |
| - | CMB 3.00T | 6204-ZZ C3 | 6203-ZZ C3 |
| - | CMB 4.00T | 6306-ZZ C3 | 6205-ZZ C3 |
| - | CMB 5.50T | 6306-ZZ C3 | 6205-ZZ C3 |
| CMC 0.75M | CMC 0.75T | 6202 2DW C3 | 6202 2DW C3 |
| CMC 1.00M | CMC 1.00T | 6202-ZZ C3 | 6202-ZZ C3 |
| CMD 1.50M | CMD 1.50T | 6204-ZZ C3 | 6203-ZZ C3 |
| CMD 2.00M | CMD 2.00T | 6204-ZZ C3 | 6203-ZZ C3 |
| - | CMD 3.00T | 6204-ZZ C3 | 6203-ZZ C3 |

## DIMENSIONS AND WEIGHT

50Hz

Rev. R

### PUMP DRAWING

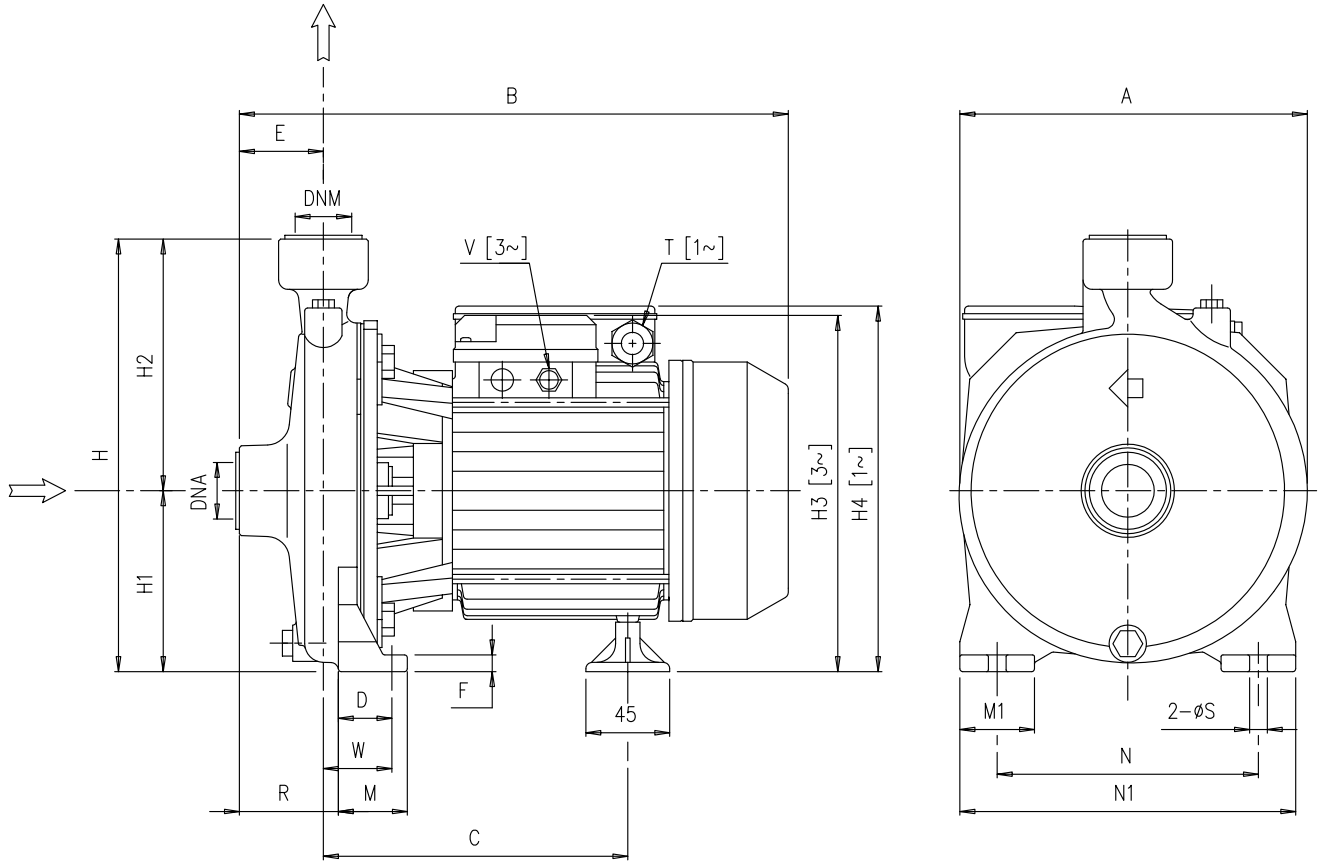


[1~] Single phase
[3~] Three phase

## DIMENSIONS AND WEIGHT

50Hz

Rev. R

### DIMENSION PUMP TABLE

| Pump type | Dimensions [mm] | | | | | | | | | | | | | | | | | | | | | | Weight |
|---|---|---|---|---|---|---|---|---|---|---|---|---|---|---|---|---|---|---|---|---|---|---|---|
| | A | B | C | D | E | F | H | H1 | H2 | H3 | H4 | M | M1 | N | N1 | R | T | V | W | S | DNA | DNM | [kgf] |
| CMA 0.50M | 160 | 261.8 | 158.8 | 30 | 44 | 8 | 202 | 82 | 120 | - | 173 | 40 | 40 | 110 | 150 | 44 | PG11 | - | 30 | 9.5 | G 1 | G 1 | 7.2 |
| CMA 0.50T | 160 | 261.8 | 158.8 | 30 | 44 | 8 | 202 | 82 | 120 | 172.5 | - | 40 | 40 | 110 | 150 | 44 | - | PG11 | 30 | 9.5 | G 1 | G 1 | 7.2 |
| CMA 0.75M | 185 | 300.3 | 171.8 | 36.8 | 45 | 9 | 232 | 97 | 135 | - | 198 | 45 | 40 | 140 | 180 | 45 | PG11 | - | 36.8 | 9.5 | G 1 | G 1 | 10.3 |
| CMA 0.75T | 185 | 300.3 | 171.8 | 36.8 | 45 | 9 | 232 | 97 | 135 | 197.5 | - | 45 | 40 | 140 | 180 | 45 | - | PG11 | 36.8 | 9.5 | G 1 | G 1 | 11.7 |
| CMA 1.00M | 185 | 300.3 | 171.8 | 36.8 | 45 | 9 | 232 | 97 | 135 | - | 198 | 45 | 40 | 140 | 180 | 45 | PG11 | - | 36.8 | 9.5 | G 1 | G 1 | 11.5 |
| CMA 1.00T | 185 | 300.3 | 171.8 | 36.8 | 45 | 9 | 232 | 97 | 135 | 197.5 | - | 45 | 40 | 140 | 180 | 45 | - | M16x1.5 | 36.8 | 9.5 | G 1 | G 1 | 11.6 |
| CMA 1.50M | 200 | 347.3 | 208.3 | 41.8 | 45.5 | 9 | 252 | 100 | 152 | - | 232 | 50 | 40 | 155 | 194 | 45.5 | PG13.5 | - | 41.8 | 9.5 | G 1 ¼ | G 1 | 19.5 |
| CMA 1.50T | 200 | 372.3 | 208.3 | 41.8 | 45.5 | 9 | 252 | 100 | 152 | 214 | - | 50 | 40 | 155 | 194 | 45.5 | - | M20x1.5 | 41.8 | 9.5 | G 1 ¼ | G 1 | 20.8 |
| CMA 2.00M | 225 | 360.3 | 208.3 | 41.8 | 45.5 | 9 | 285 | 115 | 170 | - | 247 | 50 | 40 | 180 | 220 | 45.5 | PG13.5 | - | 41.8 | 9.5 | G 1 ¼ | G 1 | 22.8 |
| CMA 2.00T | 225 | 373.5 | 208.3 | 41.8 | 45.5 | 9 | 285 | 115 | 170 | 229 | - | 50 | 40 | 180 | 220 | 45.5 | - | M20x1.5 | 41.8 | 9.5 | G 1 ¼ | G 1 | 24.3 |
| CMA 3.00T | 225 | 372.8 | 208.3 | 41.8 | 45.5 | 9 | 285 | 115 | 170 | 229 | - | 50 | 40 | 180 | 220 | 45.5 | - | M20x1.5 | 41.8 | 9.5 | G 1 ¼ | G 1 | 24.3 |
| CMB 0.75M | 188 | 315.3 | 182.3 | 36.8 | 49.5 | 9 | 251.5 | 101.5 | 150 | - | 127.5 | 45 | 40 | 140 | 180 | 65.5 | PG11 | - | 52.8 | 9.5 | G 2 | G 1 ¼ | 11.6 |
| CMB 0.75T | 188 | 315.3 | 182.3 | 36.8 | 49.5 | 9 | 251.5 | 101.5 | 150 | 127 | - | 45 | 40 | 140 | 180 | 65.5 | - | PG11 | 52.8 | 9.5 | G 2 | G 1 ¼ | 11.8 |
| CMB 1.00M | 188 | 315.3 | 182.3 | 36.8 | 49.5 | 9 | 251.5 | 101.5 | 150 | - | 127.5 | 45 | 40 | 140 | 180 | 65.5 | PG11 | - | 52.8 | 9.5 | G 2 | G 1 ¼ | 13.7 |
| CMB 1.00T | 188 | 315.3 | 182.3 | 36.8 | 49.5 | 9 | 251.5 | 101.5 | 150 | 127 | - | 45 | 40 | 140 | 180 | 65.5 | - | M16x1.5 | 52.8 | 9.5 | G 2 | G 1 ¼ | 13.7 |
| CMB 1.50M | 188 | 349.3 | 206.3 | 36.8 | 49.5 | 9 | 251.5 | 101.5 | 150 | - | 233.5 | 45 | 40 | 140 | 180 | 65.5 | PG13.5 | - | 52.8 | 9.5 | G 2 | G 1 ¼ | 19.9 |
| CMB 1.50T | 188 | 374.3 | 206.3 | 36.8 | 49.5 | 9 | 251.5 | 101.5 | 150 | 215.5 | - | 45 | 40 | 140 | 180 | 65.5 | - | M20x1.5 | 52.8 | 9.5 | G 2 | G 1 ¼ | 20.4 |
| CMB 2.00M | 200 | 373.3 | 209.3 | 36.8 | 57.5 | 9 | 271.5 | 111.5 | 160 | - | 243.5 | 45 | 40 | 160 | 200 | 76.5 | PG13.5 | - | 55.8 | 9.5 | G 2 | G 1 ¼ | 21 |
| CMB 2.00T | 200 | 386.5 | 209.3 | 36.8 | 57.5 | 9 | 271.5 | 111.5 | 160 | 225.5 | - | 45 | 40 | 160 | 200 | 76.5 | - | M20x1.5 | 55.8 | 9.5 | G 2 | G 1 ¼ | 22.9 |
| CMB 3.00T | 200 | 385.8 | 209.3 | 36.8 | 57.5 | 9 | 271.5 | 111.5 | 160 | 225.5 | - | 45 | 40 | 160 | 200 | 76.5 | - | M20x1.5 | 55.8 | 9.5 | G 2 | G 1 ¼ | 22.2 |
| CMB 4.00T | 247 | 459 | 262.5 | 48 | 60 | 12 | 323.5 | 133.5 | 190 | 259.5 | - | 60 | 50 | 190 | 240 | 77.5 | - | M20x1.5 | 65.5 | 12 | G 2 | G 1 ¼ | 37.7 |
| CMB 5.50T | 247 | 469 | 222.3 | 48 | 60 | 12 | 323.5 | 133.5 | 190 | 264.5 | - | 60 | 50 | 190 | 240 | 77.5 | - | M20x1.5 | 65.5 | 12 | G 2 | G 1 ¼ | 43.4 |
| CMC 0.75M | 186 | 313.3 | 186.8 | 36.8 | 43 | 9 | 247 | 97 | 150 | - | 198 | 45 | 40 | 140 | 180 | 63.5 | PG11 | - | 57.3 | 9.5 | G 2 | G 2 | 11.6 |
| CMC 0.75T | 186 | 313.3 | 186.8 | 36.8 | 43 | 9 | 247 | 97 | 150 | 197.5 | - | 45 | 40 | 140 | 180 | 63.5 | - | PG11 | 57.3 | 9.5 | G 2 | G 2 | 11.8 |
| CMC 1.00M | 186 | 313.3 | 186.8 | 36.8 | 43 | 9 | 247 | 97 | 150 | - | 198 | 45 | 40 | 140 | 180 | 63.5 | PG11 | - | 57.3 | 9.5 | G 2 | G 2 | 13 |
| CMC 1.00T | 186 | 313.3 | 186.8 | 36.8 | 43 | 9 | 247 | 97 | 150 | 197.5 | - | 45 | 40 | 140 | 180 | 63.5 | - | M16x1.5 | 57.3 | 9.5 | G 2 | G 2 | 13.8 |
| CMD 1.50M | 213 | 384.3 | 222.8 | 36.8 | 68 | 12 | 271.5 | 111.5 | 160 | - | 243.5 | 45 | 40 | 160 | 200 | 100.5 | PG13.5 | - | 69.3 | 9.5 | G 2 ½ | G 2 ½ | 21.3 |
| CMD 1.50T | 213 | 409.3 | 222.8 | 36.8 | 68 | 12 | 271.5 | 111.5 | 160 | 225.5 | - | 45 | 40 | 160 | 200 | 100.5 | - | M20x1.5 | 69.3 | 9.5 | G 2 ½ | G 2 ½ | 23.1 |
| CMD 2.00M | 213 | 397.3 | 222.8 | 36.8 | 68 | 12 | 271.5 | 111.5 | 160 | - | 243.5 | 45 | 40 | 160 | 200 | 100.5 | PG13.5 | - | 69.3 | 9.5 | G 2 ½ | G 2 ½ | 23 |
| CMD 2.00T | 213 | 410.5 | 222.8 | 36.8 | 68 | 12 | 271.5 | 111.5 | 160 | 225.5 | - | 45 | 40 | 160 | 200 | 100.5 | - | M20x1.5 | 69.3 | 9.5 | G 2 ½ | G 2 ½ | 24.2 |
| CMD 3.00T | 213 | 409.8 | 222.8 | 36.8 | 68 | 12 | 271.5 | 111.5 | 160 | 225.5 | - | 45 | 40 | 160 | 200 | 100.5 | - | M20x1.5 | 69.3 | 9.5 | G 2 ½ | G 2 ½ | 23.9 |

## DIMENSIONS AND WEIGHT

50Hz

Rev. R

### PACKING

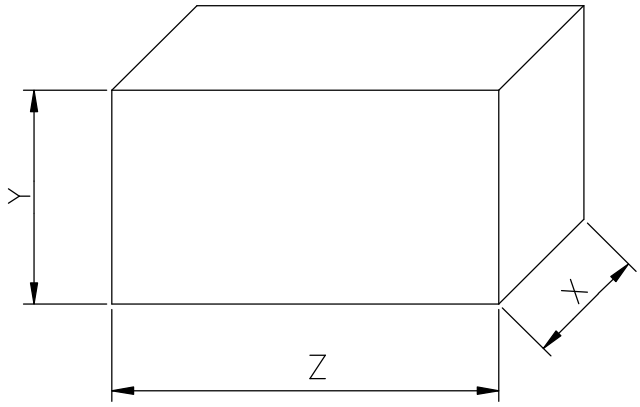


| Pump Type | | Packing [mm] | | | Weight [kgf] | |
|---|---|---|---|---|---|---|
| Single Phase | Three Phase | X | Y | Z | [1~] | [3~] |
| CMA 0.50M | CMA 0.50T | 180 | 240 | 300 | 7.8 | 7.8 |
| CMA 0.75M | CMA 0.75T | 210 | 270 | 330 | 11 | 11.3 |
| CMA 1.00M | CMA 1.00T | 210 | 270 | 330 | 12.3 | 12.3 |
| CMA 1.50M | CMA 1.50T | 225 | 290 | 400 | 20.5 | 21.4 |
| CMA 2.00M | CMA 2.00T | 250 | 325 | 400 | 23.9 | 25.2 |
| - | CMA 3.00T | 250 | 325 | 400 | - | 25.2 |
| CMB 0.75M | CMB 0.75T | 210 | 290 | 370 | 12.3 | 12.5 |
| CMB 1.00M | CMB 1.00T | 210 | 290 | 370 | 14.4 | 14.4 |
| CMB 1.50M | CMB 1.50T | 225 | 290 | 380 | 20.8 | 21.1 |
| CMB 2.00M | CMB 2.00T | 250 | 325 | 400 | 21.8 | 23.7 |
| - | CMB 3.00T | 250 | 325 | 400 | - | 23.1 |
| - | CMB 4.00T | 280 | 340 | 490 | - | 39.2 |
| - | CMB 5.50T | 280 | 340 | 490 | - | 44.6 |
| CMC 0.75M | CMC 0.75T | 210 | 290 | 370 | 12.3 | 12.5 |
| CMC 1.00M | CMC 1.00T | 210 | 290 | 370 | 13.7 | 14.5 |
| CMD 1.50M | CMD 1.50T | 237 | 320 | 427 | 22.3 | 23.1 |
| CMD 2.00M | CMD 2.00T | 237 | 320 | 427 | 24.1 | 24.5 |
| - | CMD 3.00T | 237 | 320 | 427 | - | 24.1 |

[1 ~] Single phase
[3 ~] Three phase

## MOTOR DATA

| Pump type | | Power | | Efficiency | | Capacitor | | Efficiency (% load) Three phase η % | | | Input [kW] | | Full load current [A] | | | Locked rotor current [A] | | |
|---|---|---|---|---|---|---|---|---|---|---|---|---|---|---|---|---|---|---|
| Single Phase | Three Phase | [kW] | [HP] | Single Phase | Three Phase | Single Phase [µF] | [V] | 50% | 75% | 100% | Single Phase | Three Phase | Single Phase 230 V | Three Phase 230 V | Three Phase 400 V | Single Phase 230 V | Three Phase 230 V | Three Phase 400 V |
| CMA 0.50M | CMA 0.50T | 0.37 | 0.5 | - | IE3 | 10 | 450 | 69.0 | 74.6 | 75.1 | 0.66 | 0.5 | 3.2 | 1.8 | 1.1 | 10.6 | 9.6 | 5.5 |
| CMA 0.75M | CMA 0.75T | 0.55 | 0.75 | - | IE3 | 16 | 450 | 80.2 | 82.8 | 82.9 | 1.02 | 0.91 | 4.7 | 3.0 | 1.7 | 16.1 | 20.5 | 11.8 |
| CMA 1.00M | CMA 1.00T | 0.75 | 1 | - | IE3 | 20 | 450 | 80.9 | 82.3 | 82.1 | 1.35 | 1.08 | 6.2 | 3.3 | 1.9 | 24.0 | 19.7 | 11.4 |
| CMA 1.50M | CMA 1.50T | 1.1 | 1.5 | - | IE3 | 40 | 450 | 83.5 | 84.3 | 84.6 | 1.73 | 1.77 | 8.0 | 5.8 | 3.3 | 43.0 | 47.4 | 27.4 |
| CMA 2.00M | CMA 2.00T | 1.5 | 2 | - | IE3 | 40 | 450 | 84.2 | 86.8 | 86.9 | 2.4 | 2.35 | 10.3 | 7.6 | 4.4 | 43.0 | 66.6 | 38.4 |
| - | CMA 3.00T | 2.2 | 3 | - | IE3 | - | - | 86.2 | 87.0 | 86.0 | - | 2.82 | - | 8.5 | 4.9 | - | 66.6 | 38.4 |
| CMB 0.75M | CMB 0.75T | 0.55 | 0.75 | - | IE3 | 14 | 450 | 75.1 | 78.5 | 78.0 | 0.98 | 0.71 | 4.5 | 2.4 | 1.4 | 13.3 | 12.7 | 7.3 |
| CMB 1.00M | CMB 1.00T | 0.75 | 1 | - | IE3 | 20 | 450 | 80.9 | 82.3 | 82.1 | 1.33 | 1.17 | 6.0 | 3.5 | 2.0 | 24.0 | 19.7 | 11.4 |
| CMB 1.50M | CMB 1.50T | 1.1 | 1.5 | - | IE3 | 40 | 450 | 83.5 | 84.3 | 84.6 | 1.77 | 1.77 | 8.2 | 5.8 | 3.3 | 43.0 | 47.4 | 27.4 |
| CMB 2.00M | CMB 2.00T | 1.5 | 2 | - | IE3 | 40 | 450 | 84.2 | 86.8 | 86.9 | 2.3 | 2.01 | 10.3 | 7.1 | 4.1 | 43.0 | 66.6 | 38.4 |
| - | CMB 3.00T | 2.2 | 3 | - | IE3 | - | - | 86.2 | 87.0 | 86.0 | - | 2.55 | - | 8.2 | 4.7 | - | 66.6 | 38.4 |
| | CMB 4.00T | 3 | 4 | - | IE3 | - | - | 85.9 | 87.5 | 87.1 | - | 3.44 | - | 11.1 | 6.4 | - | 90.0 | 52.0 |
| - | CMB 5.50T | 4 | 5.5 | - | IE3 | - | - | 85.8 | 88.3 | 88.4 | - | 4.96 | - | 15.6 | 9.0 | - | 131.8 | 76.1 |
| CMC 0.75M | CMC 0.75T | 0.55 | 0.75 | - | IE3 | 14 | 450 | 75.1 | 78.5 | 78.0 | 0.92 | 0.71 | 4.2 | 2.4 | 1.4 | 13.3 | 12.7 | 7.3 |
| CMC 1.00M | CMC 1.00T | 0.75 | 1 | - | IE3 | 20 | 450 | 80.9 | 82.3 | 82.1 | 1.15 | 0.91 | 5.3 | 3.0 | 1.7 | 24.0 | 19.7 | 11.4 |
| CMD 1.50M | CMD 1.50T | 1.1 | 1.5 | - | IE3 | 40 | 450 | 83.5 | 84.3 | 84.6 | 1.86 | 1.77 | 8.5 | 5.8 | 3.3 | 43.0 | 47.4 | 27.4 |
| CMD 2.00M | CMD 2.00T | 1.5 | 2 | - | IE3 | 40 | 450 | 84.2 | 86.8 | 86.9 | 2.3 | 2.01 | 10.3 | 7.1 | 4.1 | 43.0 | 66.6 | 38.4 |
| - | CMD 3.00T | 2.2 | 3 | - | IE3 | - | - | 86.2 | 87.0 | 86.0 | - | 2.55 | - | 8.2 | 4.7 | - | 66.6 | 38.4 |

## NOISE DATA

| Pump type | | Power | | $L_{pA}$ - dB(A) * |
|---|---|---|---|---|
| Single Phase | Three Phase | [kW] | [HP] | |
| CMA 0.50M | CMA 0.50T | 0.37 | 0.5 | <70 |
| CMA 0.75M | CMA 0.75T | 0.55 | 0.75 | |
| CMA 1.00M | CMA 1.00T | 0.75 | 1 | |
| CMA 1.50M | CMA 1.50T | 1.1 | 1.5 | |
| CMA 2.00M | CMA 2.00T | 1.5 | 2 | |
| - | CMA 3.00T | 2.2 | 3 | |
| CMB 0.75M | CMB 0.75T | 0.55 | 0.75 | |
| CMB 1.00M | CMB 1.00T | 0.75 | 1 | |
| CMB 1.50M | CMB 1.50T | 1.1 | 1.5 | |
| CMB 2.00M | CMB 2.00T | 1.5 | 2 | |
| - | CMB 3.00T | 2.2 | 3 | |
| - | CMB 4.00T | 3 | 4 | 72 |
| - | CMB 5.50T | 4 | 5.5 | |
| CMC 0.75M | CMC 0.75T | 0.55 | 0.75 | <70 |
| CMC 1.00M | CMC 1.00T | 0.75 | 1 | |
| CMD 1.50M | CMD 1.50T | 1.1 | 1.5 | |
| CMD 2.00M | CMD 2.00T | 1.5 | 2 | |
| - | CMD 3.00T | 2.2 | 3 | |

* Mean value of several measures at 1m distance around the pump.
Tollerance ± 2.5 dB.